ROTARY SCREW AIR COMPRESSOR COMPLETE OWNER, PARTS & TECHNICAL MANUAL

QL-10HP | 10 HP | 4-IN-1
220 V / 60 Hz / single-phase

Read all safety instructions before installation, operation or service. Keep this manual available to operators and service personnel.



Model specifications

Model	QL-10HP
Configuration	4-in-1 integrated system
Motor power	10 HP
Rated free-air delivery range	12.71-31.9 CFM
Maximum operating pressure	145 PSI
Power supply	220 V / 60 Hz / single-phase
Air receiver	60 US gal / ASME certified
Air treatment	Refrigerated dryer and precision filters
Overall length	66.30 in.
Overall width	28.52 in.
Overall height	57.09 in.
Dry weight	1,124.36 lb
Air outlet	G3/4 (3/4 in. BSPP)
Drive / speed control	Direct drive / variable speed
Sound, without ducting	60 +/- 2 dB(A)
Manufacturer warranty	2 years

Contents - Owner & Operator

Model specifications	2
1. Safety instructions	5
2. Parts and functions	15
3. Installation requirements	17
4. Before operation	21
Electrical supply and wiring	26
5. Operating instructions	27
Operating control flowcharts	31-33
Electrical wiring	34
6. Troubleshooting	35
7. Maintenance and inspection	38
8. Long-term shutdown	42
9. Disposal	43
10. Warranty and service	44
11. Service terms and record	46-47

Contents - Parts & Technical

4-in-1 operation	48
Dryer, filters and condensate maintenance	49
4-in-1 troubleshooting	50
Parts identification and ordering	51
2.Sheet metal assembly	52
3.Pipe assembly	54
4.Other components	55
5.Motor / airend assembly	56
6.Cooler assembly	57
7.Oil separator assembly	58
8.Electrical Components	59
Engineering data	60-61
Dimensional drawing	62
Electrical wiring	63
Air / oil flow	64
Engineering specifications	65

1 . Safety Instructions

Read and understand the safety instructions, warnings and unit labels before installation or use. Only trained personnel may transport, install, operate, inspect or service this compressor.

1 General notes



◎ The transportation, installation, operation, maintenance and inspection of the equipment must be carried out by well-trained personnel.

◎ Personal injury and equipment failure or damage accidents caused by the user's unauthorized modification are not covered by the guarantee, and the company does not assume any responsibility.

◎ Please strictly abide by the local government's safety regulations and on-site safety regulations.

In order to ensure safety and normal operation of the equipment, warning symbols and safety signs are given before important items in the manual.

Please follow the instructions below.

Symbols and signs

Sign description

	Electric shocks will result in personal injuries. Please disconnect all the wiring circuits before the construction on the control panel. Please refer to the wiring diagram.
	Machine rotation will result in personal injuries. Please don't take down any protection and safety devices.
	Please read the Operation Manual carefully before the machine is started. It may result in accidental injuries if do not operate in accord with the Operation Manual.
	Hazardous Voltage. Disconnect power before servicing. Lock and tag out machine.
	High pressure air and oil will result in serious personal injuries. Before taking down valves, screw caps, plugs, fixing bolts and filters, shut down the compressor and release all the pressure in the system.
	Directly using compressed air for breathing will result in serious personal injuries. To accord with health and safety regulations, it is considered that additional filtration apparatus and treatment equipments are installed.

Confirmation of number plate

Check the compressor and receiver nameplates. Record the model and serial number before commissioning. If a plate is missing or illegible, contact Quick Lift USA.

Provide the model and serial number when requesting repairs or ordering parts.

3 Safety notice

General safety requirements

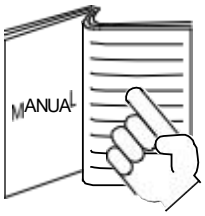

Before installing, maintaining or overhauling the compressor, you must fully understand the relevant content in the manual.

The compressor operator and management personnel must prohibit those who do not understand the contents of this manual from operating the compressor.



During operation and maintenance, proper clothing and protective equipment should be worn.
Especially when installing, disassembling and assembling the compressor, you must wear a safety helmet and safety shoes.

Also wear goggles to avoid damage to your eyes by compressed air.



Safety regulations must be established and implemented at the compressor site.

When operated by inexperienced personnel, it must be carried out under the guidance of professionals.



Please use genuine parts of Quick Lift compressor.
Using non-genuine parts may cause malfunction and damage to the equipment.



The compressor must be properly grounded.

Problems such as clutter interference can cause damage to electrical equipment or cause electric shock.

Please use separate grounding.

When transporting

When using a forklift



Please insert the forks of the forklift into the forklift holes on the bottom plate for transportation.

When transporting, please place a cloth in the soundproof cover of the compressor and the fork shop to prevent damage to the equipment.

When using a crane



When lifting, please use a rope to pass through the ear holes of the bottom plate, and cover the panel of the soundproof cover with a cover cloth and baffle to avoid damage to the compressor.

Please keep the angle between the rope and the top edge of the cabinet above 45° and lift and move slowly.

?For details, please refer to " 1 Equipment Unloading" in 4-1

Setting place and installation

Move



When using a crane or forklift to move the compressor, place a cloth in the soundproof cover of the compressor and the fork shop to prevent damage to the equipment.

During transportation or installation, avoid the compressor from falling down and keep the inclination angle within 45°.

Place

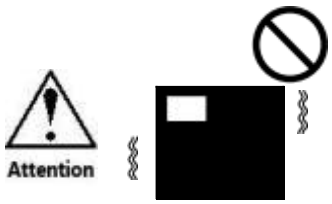

This compressor is only suitable for indoor installation. It cannot be installed outdoors or in a semi-outdoor environment.

- Installation in a wet or rainy environment will cause leakage, water accumulation and corrosion.
- Installation in dusty places, such as iron powder, dusty places, will reduce the insulation performance of electrical components and cause damage to rotating parts.
- Installation in a place with corrosive gas will cause deterioration of compressor oil and corrosion of parts.



Do not install the compressor near an open flame, or the ambient temperature is higher than 113°F

Installation



If the compressor is installed in a sealed indoor environment, please provide suction and exhaust vents, and install a ventilation fan of appropriate capacity on the exhaust.

During electrical operation

Power wiring

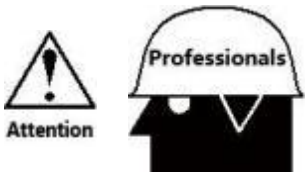

Electrical wiring must be performed by qualified electrical technicians.

- The power cable must not be exposed.
  The wiring lead-in hole of the electric control cabinet should be equipped with a protective cover to prevent cable damage.
- Leakage, insulation degradation, overcurrent, short circuit, phase error, and safety device failure may cause fire accidents in motors, cables and circuits.

  Electrical engineering must be constructed in accordance with the prescribed technical standards.

Breaker

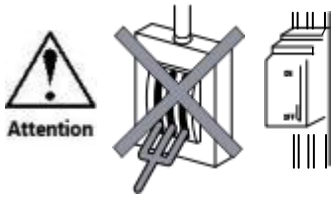

The power switch should adopt a suitable leakage protection circuit breaker according to the compressor model.

In the absence of a leakage protection device, the guillotine switch cannot be used.

Installation

Unauthorized removal, modification of the safety device, or changing its set value may cause an accident.

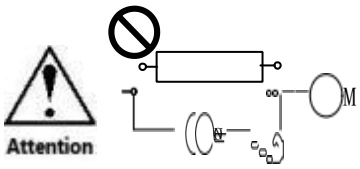

Starting the compressor without a safety device or changing the set value of the device will cause the compressor oil to overheat and cause a fire or other safety accidents.

Therefore, it is not possible to operate the compressor without safety devices or changing device settings.

Grounded

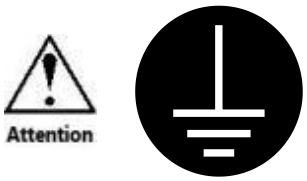

A qualified electrician must connect the equipment grounding conductor to the designated grounding terminal. Use the actual 220 V single-phase supply diagram. Operating without correct grounding can cause shock, fire or equipment damage.

Runtime

Dangerous



It is forbidden to stack any flammable materials around the compressor.
It is forbidden to use open flames around the compressor.





- Performing spark-generating work such as welding near the compressor may cause the compressor to catch fire and cause a fire.
- Do not go near the exhaust port. During operation, the vicinity of the exhaust port heats up. Too close may cause burns.

Pressure



The compressor must operate within the pressure limits specified in this manual.

Rotating parts







When the operation indicator light is on, even if the compressor is stopped, never touch the rotating parts.

- When touching rotating parts, such as fans, the power must be cut off first.
- Please note that the compressor will start automatically when the discharge pressure is lower than the set value of automatic recovery pressure.

During shutdown

Close the shut-off valve on the exhaust pipe of the stopped compressor and drain the condensate.
Drain the condensate from the air storage tank as needed.

Parallel operation

Isolate the compressor from connected air lines before maintenance. Vent trapped pressure on both sides of isolation points and verify zero pressure.

Long-term downtime



Attention

Cut off the power supply and close the compressor's exhaust shut-off valve.

It should be ensured that it is energized and operated for about 20 minutes a week to avoid rust in the compressor.

Drain receiver condensate before extended shutdown. Protect the unit from freezing and moisture. Never open pressurized oil or air components.

Inspection during shutdown

Pressure

Before inspecting the compressor body or changing the compressor oil, the stop button must be used to stop the compressor. At the same time, the pressure of the oil/air separator must be confirmed to be zero, the circuit breaker must be disconnected, and the power supply must be cut off before the inspection.

Power supply

When checking the electric control cabinet, all power must be cut off.

Safety valve

The safety valve has undergone rigorous performance testing. Therefore it cannot be disassembled for inspection.

If there is any abnormality, please contact the maintenance personnel of our company.

compressor oil

Original oil



Please use the original lubricant of Quick Lift compressor.

Do not mix lubricants of different brands. The mixed use of oil will cause deterioration of oil quality.

Poor circulation due to deterioration of compressor oil, oil cut, and increase in viscosity will cause abnormally high temperatures and cause abnormal shutdowns.



The oil level must be checked once a month. If it is low, add proper amount of lubricant.

?For details, please refer to 4-4 "Oil filling Guide"

Supply







When the compressor is running, if the oil level is below the lower limit, add compressor oil.

?When adding compressor oil, you must first press the stop button of the machine to stop it, and then confirm that the pressure of the oil-air separator is zero, disconnect the circuit breaker, and cut off the power before operation.

Note: Within 2 minutes after the compressor stops running, there may still be pressure in the oil separator.

Before changing the oil, make sure that there is no internal pressure.

Change



The longest service life of the compressor oil is 4000 hours or 6000 hours or 8000 hours depending on the type of oil filling. When changing the oil, you must ensure that all the compressor oil is completely replaced

If the oil quality deteriorates, all lubricants must be replaced immediately.

The carbide precipitated when the oil quality of the compressor oil deteriorates will be adsorbed on the oil filter core, and the heat released during the carbon oxidation process will cause a local temperature increase, which may cause a fire or explosion.

In the case of deterioration of compressor oil, the oil separator element and the oil filter must also be replaced at the same time.

Overhaul



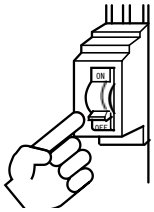

Overhauls are generally implemented every 5 years. In addition, the motor coil is cleaned while the main engine is overhauled.

When the compressor is overhauled, all power must be cut off.

※Overhaul time varies according to the customer's use of the ring mirror.

2. Parts and functions - appearance

QL-10HP: 10 HP 4-in-1 rotary screw compressor with integrated ASME-certified air receiver, refrigerated dryer and precision filter system.

The controller monitors compressor operation. The dryer and drains must also be checked during daily inspection. Keep all access panels, cooler openings and electrical enclosures accessible.



Internal components & functions

Motor and airend	The direct-drive motor turns the oil-injected rotary screw airend.
Oil separator and oil filter	Separate compressor oil from discharged air and filter circulating oil.
Oil cooler / aftercooler	Reject heat from the compressor oil and discharge air.
Refrigerated dryer	Cools compressed air to condense moisture for drainage.
Precision filters	Remove contaminants according to the installed elements.
Air receiver	Stores compressed air; includes drains and pressure protection.

Match all service parts to the model, serial number and installed component. See the Parts section for exploded views and factory identifiers.



3. Installation requirements - environment

Install indoors on a level, stable surface. Keep the compressor protected from rain, wet floors, direct weather exposure and corrosive atmospheres.

Do not draw in metal dust, sand, cutting-fluid mist, boiler smoke, plastic-processing fumes, vehicle exhaust or harmful gases. Contaminated intake air can damage filtration, electrical insulation and lubrication.

Provide clean cooling air and avoid recirculating hot discharge air. The model engineering sheet lists 113°F as the maximum ambient temperature. Do not operate above that limit.

For cold starts or subfreezing conditions, obtain the approved model-specific oil, drainage and start procedure from Quick Lift USA. Do not start a frozen or moisture-damaged unit.

Avoid strong external vibration. Sound level will vary with room construction, mounting and surroundings. Contact Quick Lift if the installation environment is outside normal indoor service conditions.

Installation space & service clearance

Front	At least 39.37 in.
Left side	At least 39.37 in.
Right side	At least 39.37 in.
Rear	At least 39.37 in.
Above	At least 39.37 in.

Keep the intake and cooling-air outlet unobstructed. Allow the access panels to open fully and leave clear access to system drains, gauges, isolation valves and the electrical disconnect.

Use the overall dimensions on the specification page for space planning. Verify actual mounting-hole locations on the unit before drilling. Do not use overall dimensions as anchor coordinates.

Install exhaust fans or approved ducting to keep harmful gases away from the intake and hot air from recirculating.

4 Precautions in a closed indoor environment

Installation of ventilation fans and ventilation ducts

- Installing the compressor in a closed room will increase the room temperature and cause the compressor to stop.

To prevent this, a suction port should be installed on the wall to introduce fresh air and an exhaust port to discharge hot air, and a ventilation fan should be installed on the exhaust port.
(The exhaust vent should be located at a high place, and the suction vent should be located at a low)

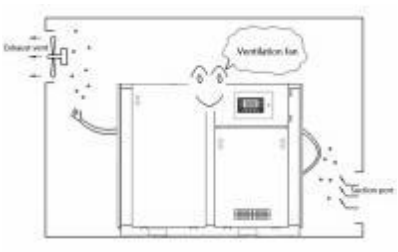

Provide sufficient fresh-air intake to prevent negative room pressure. Keep hot air away from the compressor intake. Low ceilings and restricted exhaust paths can cause recirculation.

Maintain room temperature within the model limit of 113°F.

■ Installation of ventilation ducts

- If you cannot install a ventilation fan, you must ensure that you install a ventilation duct.
- Do not fix the air duct directly on the air compressor with screws.
- The outlet of the air duct should be equipped with a metal mesh cover to prevent foreign matter from entering the air duct.
- Necessary measures must be taken to prevent rainwater from entering the air duct.
- Minimize the bending part of the exhaust duct.
- The curved part of the ventilation duct should be installed as large as possible to reduce pressure loss.

If duct pressure loss exceeds a pressure loss of 0.080 in. water column, provide a properly sized booster fan. Use a heat-resistant fan rated to 176°F. Support ducting independently and allow removal for service.

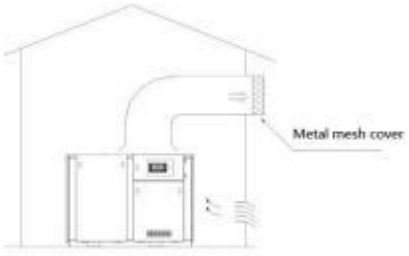

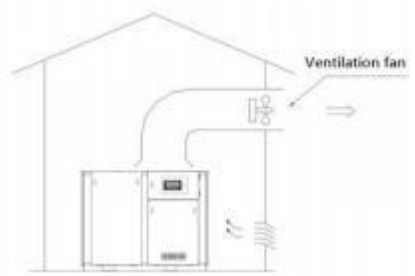

Installation of ventilation ducts

① Whole ventilation/local ventilation method (*1)	②Ventilation duct method	③Ventilation duct + ventilation fan method
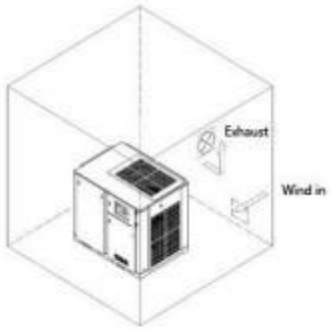	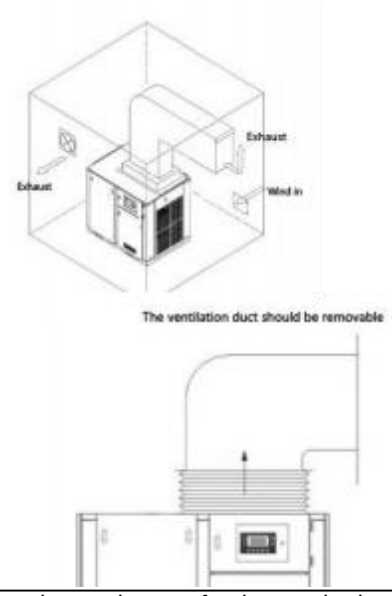	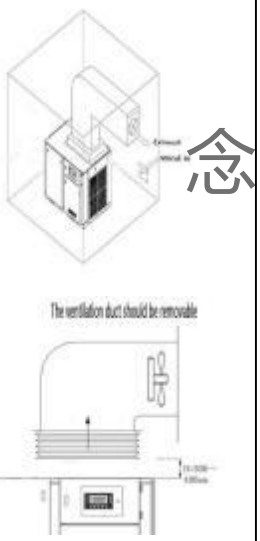
Room ventilation should limit the indoor temperature rise to 9°F. Keep inlet velocity below 394 ft/min. The ventilation design must maintain fresh cooling air at the compressor intake. （※1） The fan directly discharges 1/3 to 1/2 of the exhaust air volume of the air compressor.	Calculate duct resistance for the required airflow. The duct-system pressure limit is 0.201 in. water column. Provide a suitable exhaust fan if resistance exceeds that value. Use removable duct connections; do not drill directly into the compressor cabinet. Minimize bends and use large bend radii. If temperature still rises, improve ventilation. Prevent rain entry and keep the fresh-air inlet large enough to maintain inlet velocity below 394 ft/min.	For ducting with an exhaust fan, size the fan to overcome actual resistance and maintain cooling airflow. Use a heat-resistant fan rated to 176°F. Interlock ventilation with compressor operation. Keep fresh-air inlet velocity below 394 ft/min. Do not allow hot exhaust air to return to the intake.

4． Precautions before operation

1 Loading and unloading of equipment

When loading, unloading and transporting the equipment, use the forklift hole at the bottom of the compressor.

Reference

The opening size of the hole is large enough to accommodate the fork tines of a forklift, so the forklift can be used for loading, unloading, and transportation.

Before starting work, you must read the handling items in Section 1-4 "3 Safety Instructions".

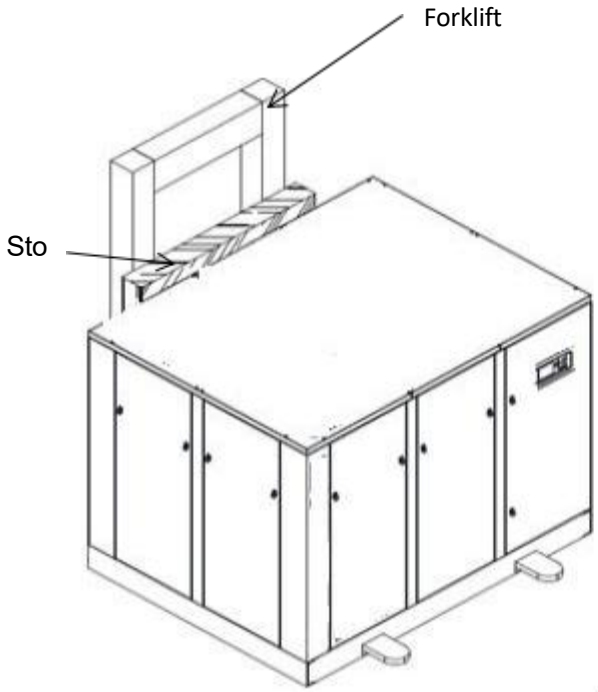

Forklift time

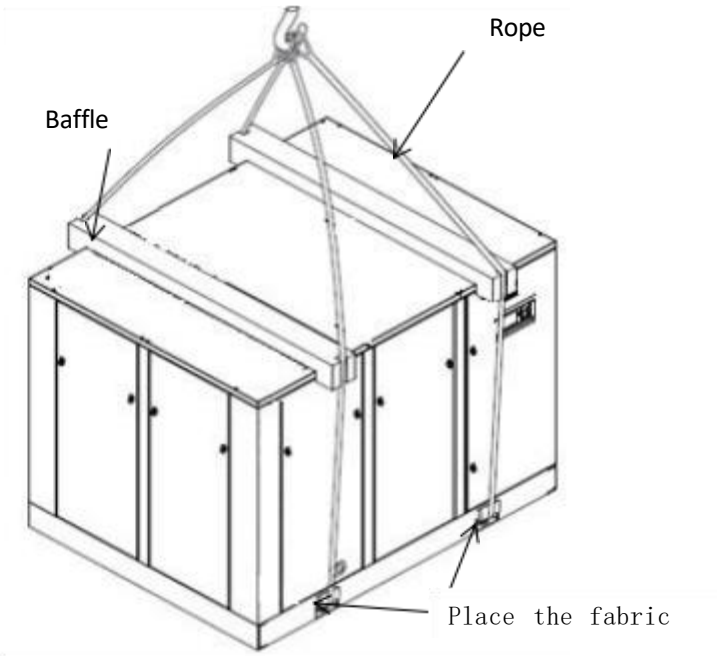

When lifting

Note

Attention

- Check and make sure that the front panel is closed so as not to accidentally open it during transportation.

2 Precautions for pipe connection

Pipe connection

- If the length of the pipeline is long without support, vibration may be generated and transmitted through the pipeline, causing damage to the equipment and devices connected to it. Therefore, it is necessary to provide sufficient support for the long pipeline (suspender, bracket, clamp), please refer to the following diagram.
- When two or more compressors are connected to the same main gas pipeline, please install a shut-off valve in front of the main pipeline. After the compressor is stopped, the shut-off valve should be able to close.
- The main pipe should be inclined (downward) in the direction of the airflow to prevent condensation water from accumulating in the main pipe.
- When there is a high and low distribution in the connecting pipe, a condensate drain must be installed at the bottom.
- To prevent the condensate from flowing back when the exhaust pipe is connected to the main pipe, it must be connected from the top of the main pipe.

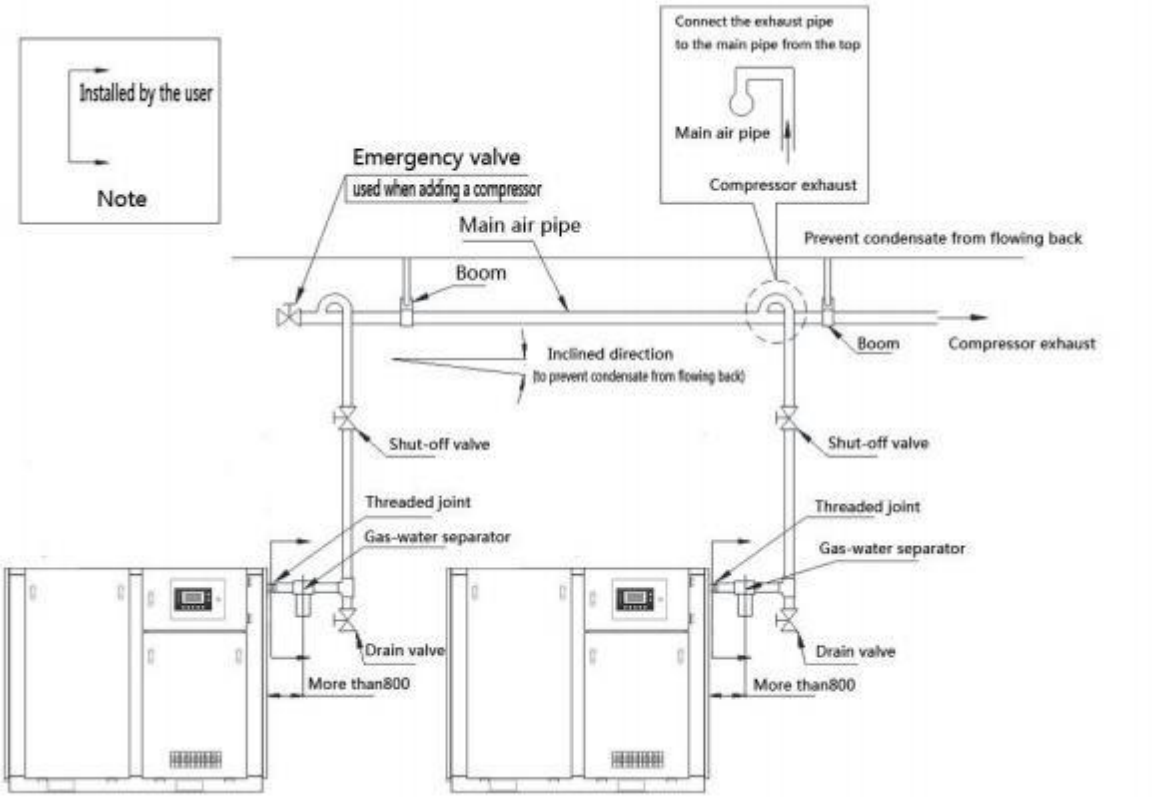

Attention

The backflow of condensate in the main pipeline should be prevented.

(The backflow of condensed water in the piping causes clogging, corrosion of the water separator and corrosion of the cooler)

Integrated air receiver & drainage

The QL-10HP includes a **60 US gallon ASME-certified air receiver**. Keep the certification plate, serial number and maximum allowable working pressure legible.

Inspect the receiver, supports, drain, gauge and safety valve before use. Never weld, drill, heat, modify or repair a pressure vessel without the required qualified procedure.

Drain condensate regularly. Verify that automatic drains operate and discharge through securely routed tubing into a suitable collection system. Isolate and fully depressurize before servicing a drain or filter bowl.

Never exceed the receiver nameplate pressure or bypass a safety valve. Stop operation if corrosion, damage or leakage is found. Have the receiver and safety devices inspected according to their service requirements.

Discharge condensate and used oil through an appropriate collection and disposal system. Keep drains protected from freezing.

Compressor oil - selection & level

Approved mineral rotary screw oil	Maximum: 4,000 hours
Approved synthetic oil	Maximum: 6,000 hours
Approved fully synthetic oil	Maximum: 8,000 hours

Use the rotary screw compressor oil approved for this model. The maintenance schedule specifies ISO VG 46 compressor oil. ISO viscosity grades identify the lubricant and are not converted to motor-oil grades.

Never mix different or unidentified oils. Oil deterioration can restrict circulation, raise temperature and create deposits. If oil is contaminated or deteriorated, replace it promptly and have the filter and separator inspected.

Total oil fill: 4.23 US qt. Fill by the approved procedure and indicated operating level; do not rely on volume alone.

Keep the operating oil level between the high and low marks. Oil returning after shutdown can temporarily raise the indicated level. Stop and investigate a level that changes suddenly or remains abnormal.

Adding compressor oil

Use STOP for normal shutdown and allow unloading to finish. Disconnect and lock out electrical power, isolate the air system and verify zero pressure in every component to be opened. Wait at least two minutes after stopping; elapsed time alone does not prove depressurization.

Allow the oil and components to cool. Clean around the oil filler to prevent dirt entering the system. Open the filler slowly only after zero pressure has been verified.

Add the approved rotary screw compressor oil through the designated oil filler. Fill to the indicated level; do not overfill or mix unidentified oils.

Total oil fill: **4.23 US qt**. Use the sight glass and approved level procedure to determine the actual addition required.

Refit and tighten the filler plug, wipe up spilled oil and reinstall all panels. After a supervised restart, inspect for leakage and confirm the operating oil level.

Electrical supply & wiring

This 4-in-1 package uses **220 V / 60 Hz / single-phase**. A qualified electrician must install the supply using the unit nameplate, drive instructions and matching wiring diagram.

Size conductors, disconnects and overcurrent protection for the complete installed package, including the dryer and auxiliary loads. Use the actual package nameplate; motor current alone does not define the complete system load.

Connect the equipment grounding conductor to the designated terminal. Use suitable strain relief and protect cables against heat, vibration and sharp edges.

Do not change incoming phases or motor leads on a variable-speed system without the matching drive procedure. Follow the installed drive instructions and verify absence of voltage before electrical work.

5. Instructions

1 Operation Guide

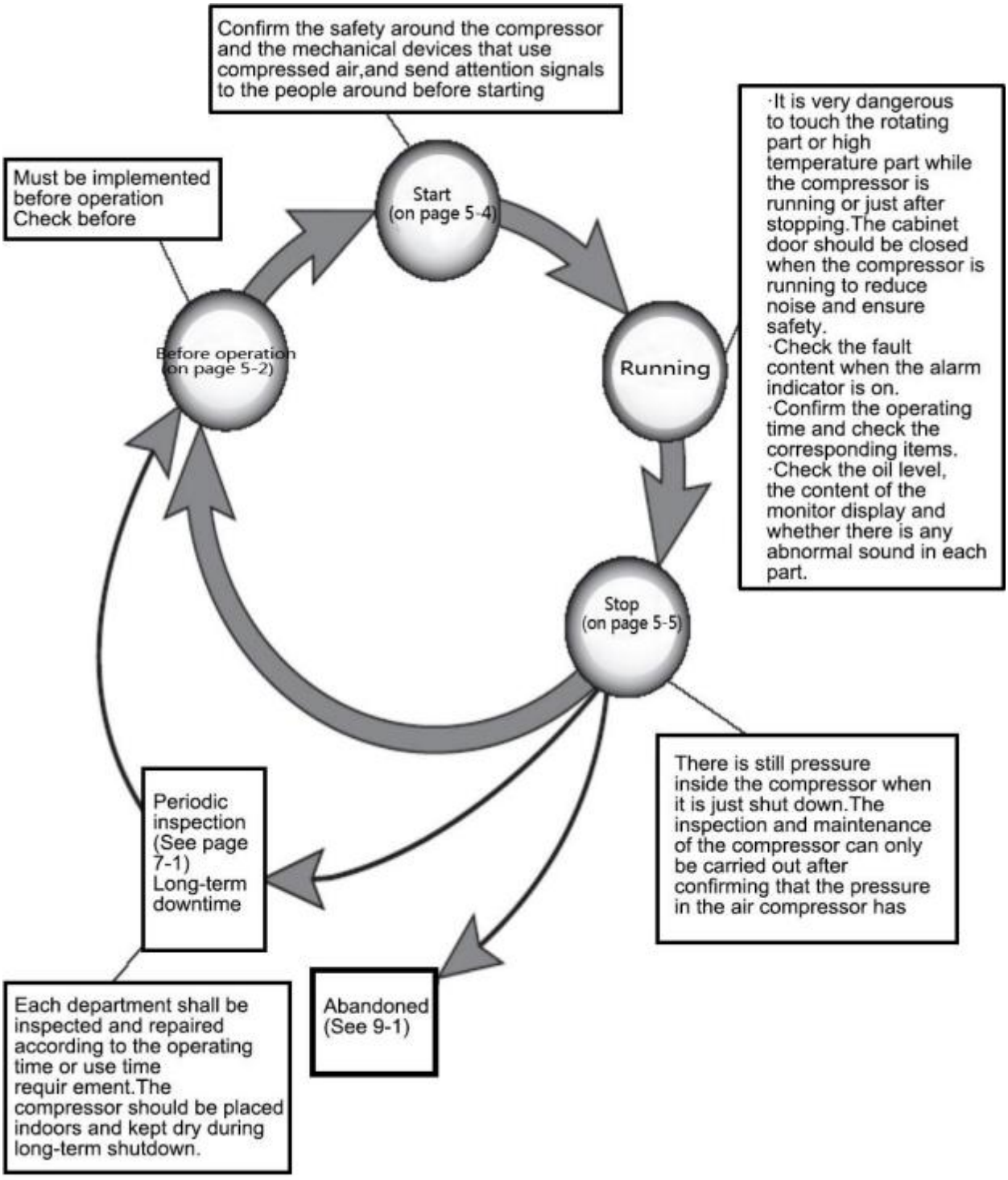

2 Check before operation



Is the air inlet on the side of the compressor and the air outlet on the top blocked?



Is the oil level normal?

Check the oil level before running. If you find that the oil level is obviously abnormal (higher or lower than the previous time), please check and confirm.

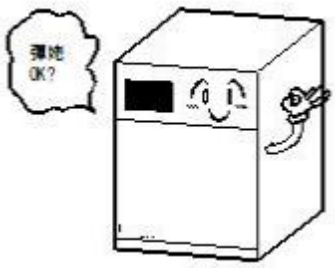

※ The oil level when the compressor is stopped will change due to the operating conditions before the stop (the return oil volume of the oil cooler is different.) Therefore, after the compressor is started, check whether the oil level is between H-L.

In addition, too much oil will cause the recovery performance of the oil separator to decrease and excessive oil consumption.

3 Operation method

start

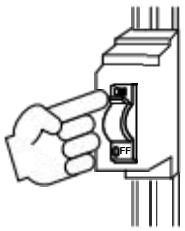

1. Complete pre-start checks and energize the approved supply. Verify normal controller status.

2. Check displayed operating values. Contact Quick Lift before changing protected settings.



3. Use the normal START control. Let the programmed starting sequence complete.

4. Monitor pressure, temperature, oil level and leakage. Stop if an abnormal condition occurs.



(This picture is for reference only, the specific controller panel may be different depending on the model)

5 Check to confirm the compressor operating condition.

- Is the oil level between the red and yellow lines?
- Is the exhaust pressure and exhaust temperature too high?

※When the alarm indicator lights up and the warning information is displayed on the display, please refer to this manual

After troubleshooting, you must press the reset button under the status of the fault content.

If the fault cannot be eliminated, please contact our after-sales service personnel.

Downtime



1. Press the stop button to stop.

Please wait for more than 2 minutes and confirm that the pressure in the compressor has dropped.

※The compressed air in the compressor will be emptied automatically.
(This picture is for reference only, the specific controller panel may be different depending on the model)

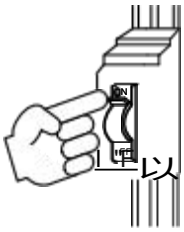

2. Open the leakage protection circuit breaker.
(This picture is for reference only, the specific controller panel may be different depending on the model)

Emergency shutdown

If the stop button of the compressor is pressed, the compressor will stop after 15 seconds of unloading operation. If the compressor needs to be stopped immediately due to an emergency, please press the emergency stop button.

※The emergency stop button can only be used in an emergency.

4 Electrical flow chart

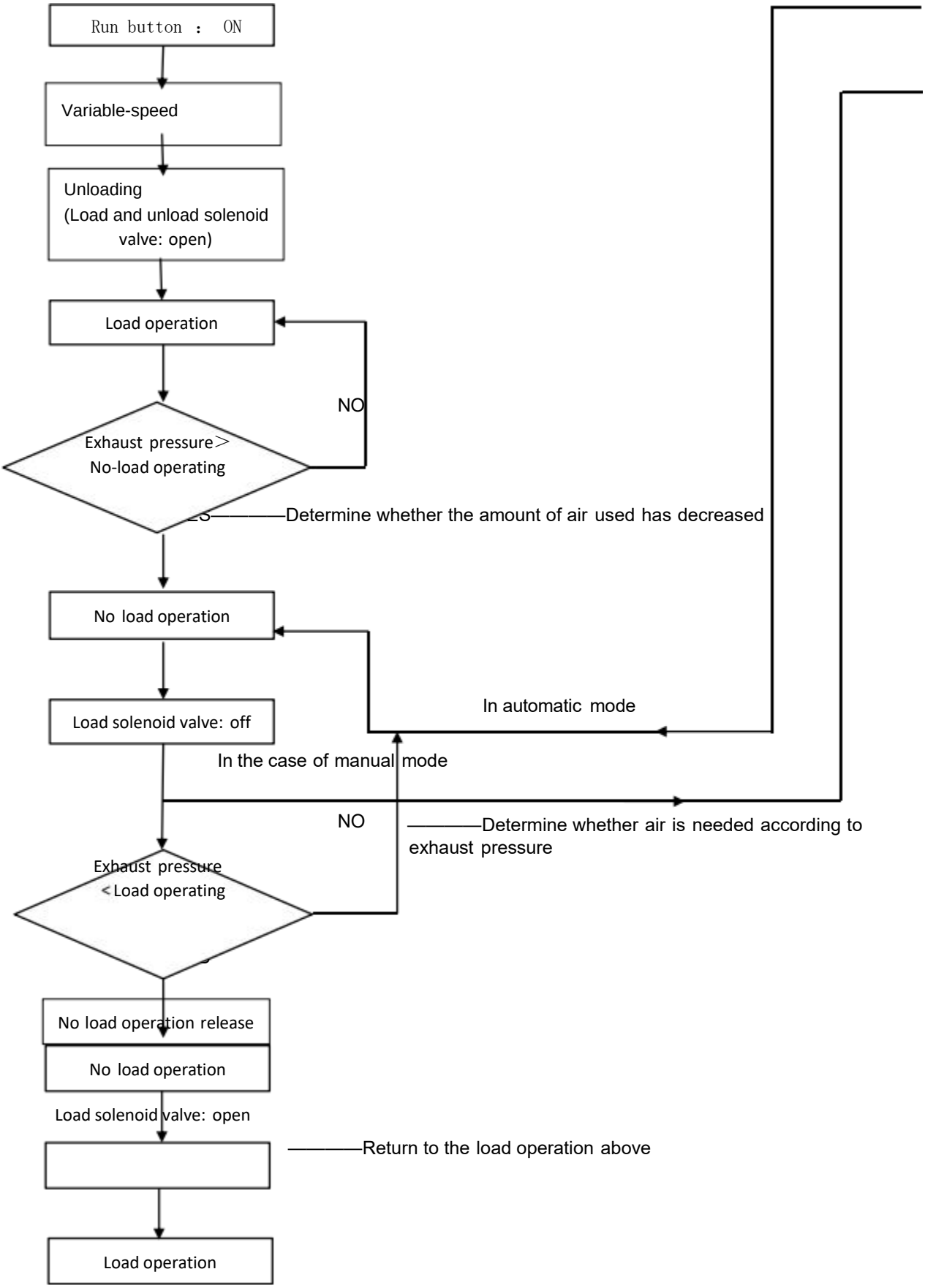

Control timing and menu settings follow the installed controller.

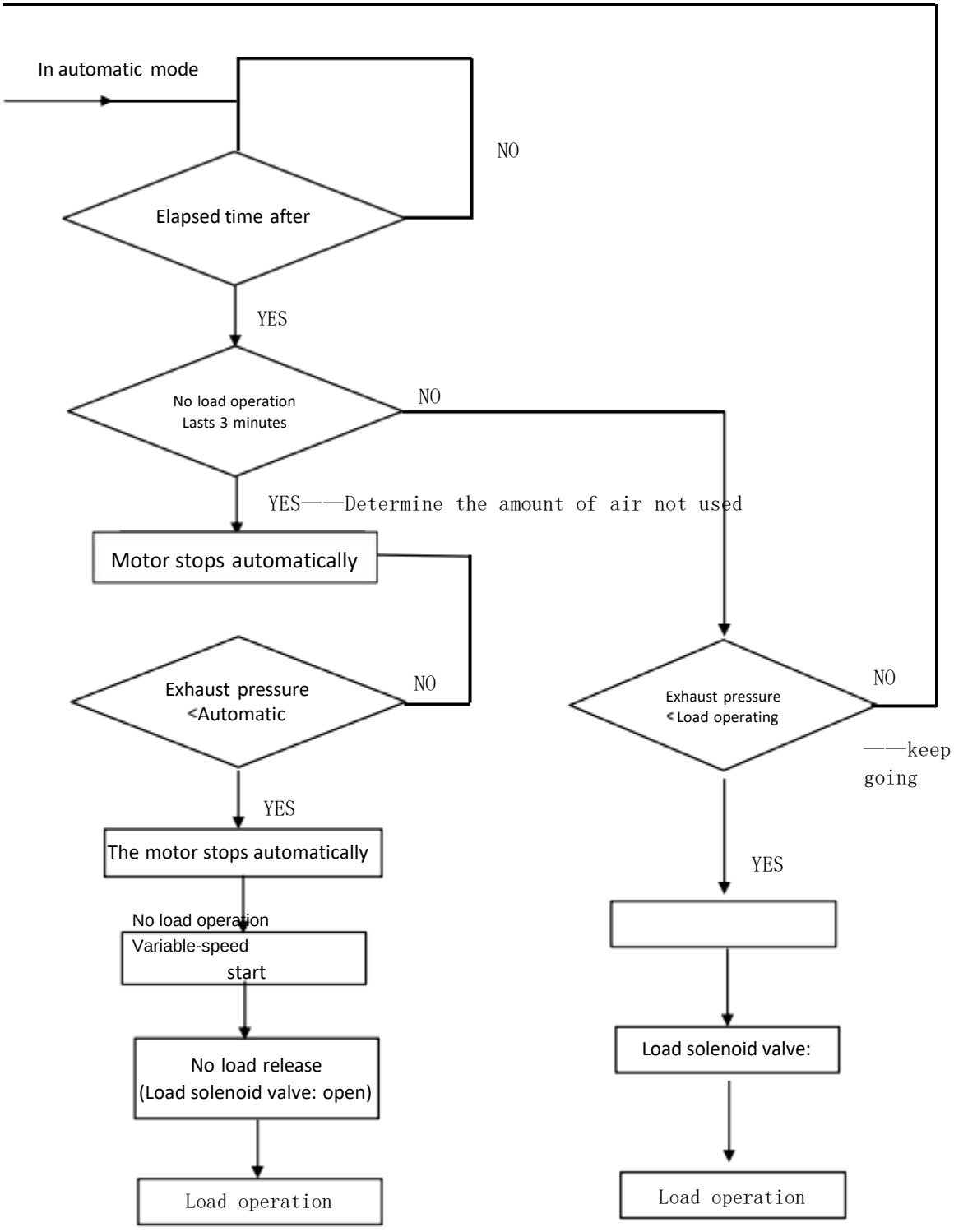

For detailed settings of the control and panel, please refer to the control panel operation manual.

Control timing and menu settings follow the installed controller.

Emergency stop

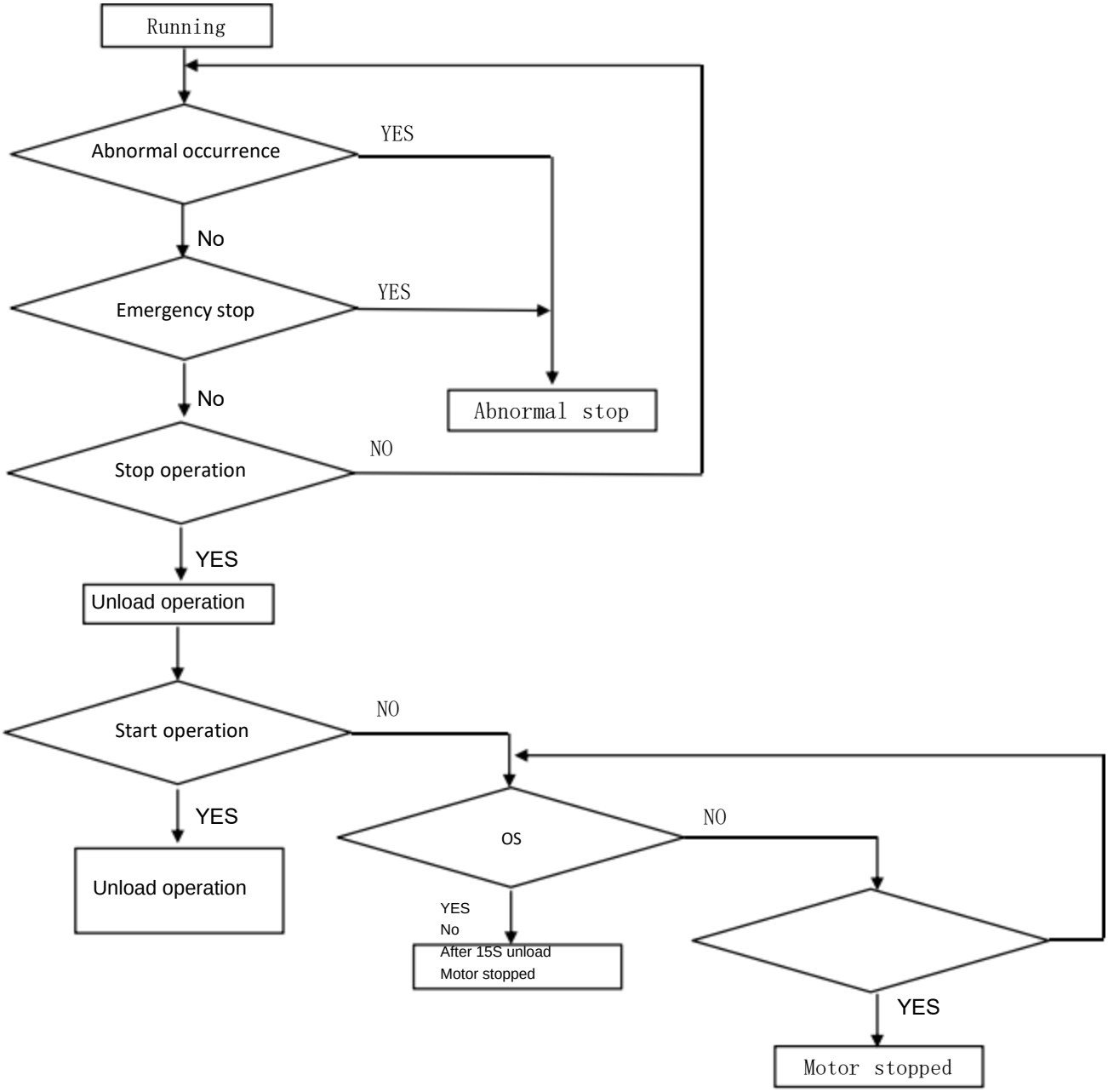

Control timing and menu settings follow the installed controller.

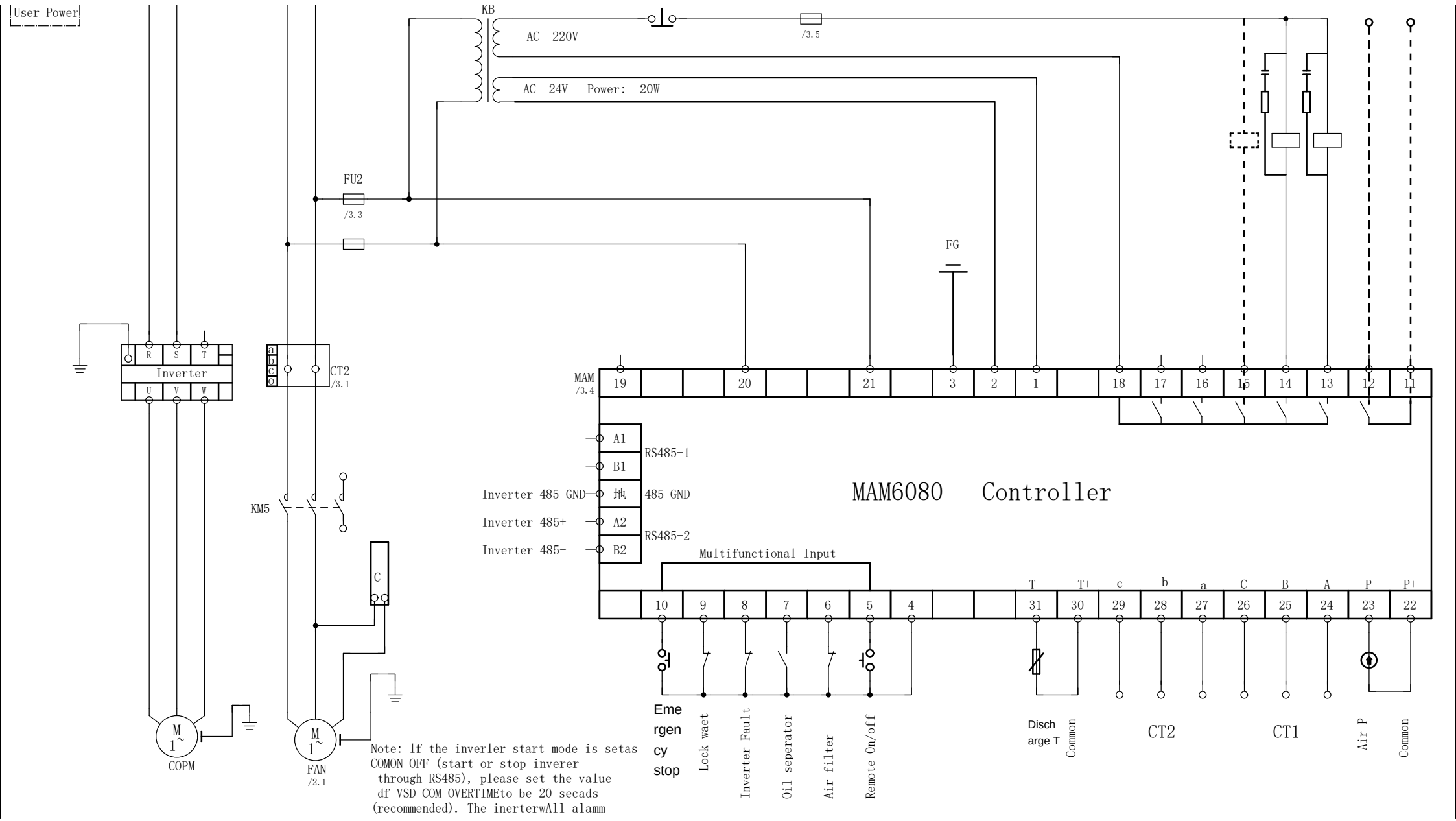
User Power
KB
AC 220V
/3.5
AC 24V Power: 20W
FU2
/3.3
FG
R
S
T
Inverter
U
V
W
CT2
/3.1
-MAM
/3.4
19
20
21
3
2
1
18
17
16
15
14
13
12
11
A1
B1
RS485-1
Inverter 485 GND
地
485 GND
Inverter 485+
A2
Inverter 485-
B2
RS485-2
MAM6080 Controller
Multifunctional Input
KM5
C
10
9
8
7
6
5
4
T-
T+
c
b
a
C
B
A
P-
P+
31
30
29
28
27
26
25
24
23
22
M
1~
COPM
M
1~
FAN
/2.1
Note: lf the inverler start mode is setas
COMON-OFF (start or stop inverer
through RS485), please set the value
df VSD COM OVERTIMEto be 20 secads
(recommended). The inerterwAll alamm
Eme
rgen
cy
stop
Lock waet
Inverter Fault
Oil seperator
Air filter
Remote On/off
Disch
arge T
Common
CT2
CT1
Air P
Common

6. Troubleshooting - electrical faults

Will not start	Check electrical supply, disconnect, emergency stop and active alarms.
Overload / drive alarm	Record the code; verify supply, motor load and drive connections.
High-temperature shutdown	Inspect airflow, coolers, oil level and oil condition.
High-pressure shutdown	Verify the sensor, outlet path and approved pressure settings.
Pressure / temperature sensor alarm	Inspect the sensor and connections with power safely isolated.

Record the displayed alarm and operating conditions. Stop the compressor, identify the cause and correct it before restarting. Do not repeatedly clear a fault to continue operation.

The controller protects against abnormal temperature, pressure, sensor and motor/drive conditions. Keep all protective functions enabled. A qualified technician must investigate electrical faults.

Any motor-rotation or inverter connection checks must follow the matching drive and model wiring documents. Do not interchange leads on a variable-speed system without the approved procedure.

Mechanical warnings & alarms

Low oil level	Inspect leakage and the approved operating oil level.
Restricted air filter	Inspect and clean or replace the intake element.
Separator restriction	Check the separator and oil-return circuit.
Excess oil carryover	Check oil level, separator element and return line.
High discharge temperature	Inspect cooling openings, cooler fins and lubrication.
Unusual noise / vibration	Stop and inspect the airend, motor, mounts and piping.
Low output / unstable pressure	Check leaks, demand, inlet valve and control operation.
Safety valve opens	Stop; inspect pressure regulation and the certified safety valve.

A warning may be displayed while the unit continues running. A major fault stops the compressor. Alarm indication and message format vary with the installed controller.

Inspect and correct the cause before a warning develops into equipment damage. Do not defeat a protective shutdown.

Corrective actions

Before inspection or repair, stop normally, lock out electrical power, isolate the compressor from the air system, vent all trapped pressure and verify zero pressure. Allow hot components and oil to cool.

For high temperature, inspect intake restrictions, hot-air recirculation, cooler contamination, oil level, lubricant condition and cooling fan operation.

For low air delivery, check external leakage, intake filtration, inlet-valve operation, control settings and actual air demand. Do not increase the pressure limit to mask a fault.

For oil carryover, check for overfilling, deteriorated lubricant, separator damage or a restricted return circuit. Have a qualified technician repair the cause.

After repairs, reinstall all guards and panels. Perform a supervised start, verify pressure and temperature, check leakage and oil level, and confirm that protective functions operate normally.

Record the service date, operating hours, fault and corrective work. Contact Quick Lift USA if the cause cannot be corrected safely.

7. Maintenance & inspection

Component	Service interval / action
Air filter	Inspect daily; service at 2,000-3,000 hours or earlier if restricted.
Oil filter	Replace at the 2,000-3,000-hour reference
Oil separator / gasket	Replace at the 4,000-hour service interval or when
Compressor oil	Initial service at 500 hours; subsequent interval depends on approved oil and conditions.
Inlet / unloading valves	Inspect at scheduled service; overhaul or replace worn seals and parts.
Airend / shaft seal	overhaul at the factory five-year service interval.
Motor and fan bearings	Inspect condition; follow the installed motor's lubrication and replacement instructions.
Anti-vibration mounts	Inspect for deterioration and replace damaged mounts.
Oil-return check valve	Inspect operation and clean or replace as required.
Oil filler O-ring	Inspect at oil service; replace a damaged or leaking seal.

These intervals apply to normal service. Inspect more frequently in dusty, hot or contaminated conditions. A maintenance interval is not a warranty period. Keep service records and follow the actual installed component instructions.

7. Maintenance & inspection - continued

Component	Inspection / service action
Hoses, O-rings and joints	Inspect for cracks, wear, hardening and leakage; replace damaged seals.
Controller / electrical connections	Check operation and alarms; qualified inspection with power isolated.
Oil sight glass	Inspect clarity and leakage; replace if the level cannot be read.
Pressure sensor / gauge	Inspect connections and verify readings if abnormal.
Temperature sensor	Inspect connections and verify readings if abnormal.
Thermostatic valve	Inspect operation during scheduled service.
Oil cooler / aftercooler	Clean at the 4,000-hour service interval; shorten in
Oil separator vessel	Inspect and clean during qualified annual service.
Receiver / safety valve	Inspect condition; service to the certified vessel and valve requirements.
Replacement seals	Replace associated gaskets and O-rings when servicing main components.

These intervals apply to normal service. Inspect more frequently in dusty, hot or contaminated conditions. A maintenance interval is not a warranty period. Keep service records and follow the actual installed component instructions.

Electrical inspection & insulation testing

Only qualified technicians may carry out insulation testing. The drive, controller, electronic monitors and surge-protection components can be damaged by an incorrect test procedure.

Disconnect the supply, lock out power, observe the drive's capacitor discharge time and verify absence of voltage before electrical work. Isolate sensitive electronics in accordance with their own instructions before any insulation test.

Motor insulation testing requires testing below 500 V DC and a minimum of 10 megohms at room temperature. Do not apply that test through a connected inverter or controller. Use the installed motor and drive instructions to determine the correct procedure.

Inspect grounding and restore every connection after testing. Verify protective functions before returning the unit to service.

Service intervals assume normal operation, at a duty of 8,000 hours per year. Adjust maintenance to actual hours and conditions. Replace required gaskets, seals and O-rings with serviced components.

Intake filter cleaning & motor lubrication

Stop, isolate and lock out the compressor before opening the intake filter. Remove the element carefully to prevent dirt from entering the airend.

Inspect the element and seal. Clean only by the element maker's approved method; replace a damaged, heavily contaminated or restricted element. Refit the housing and confirm correct sealing.

Increase inspection frequency in dusty environments. Do not continue operating with a blocked or missing filter.

Lubricate motor bearings only if the installed motor has serviceable grease fittings. Follow its specified grease, quantity and interval.

Do not mix incompatible grease or overfill bearings. Incompatible thickeners, base oils or additives can cause poor lubrication, overheating, deposits and early bearing damage. Use only the specified lubricant.

If the motor uses sealed bearings, do not attempt to add grease. Contact Quick Lift USA for the procedure matched to the motor and serial number.

8. Precautions for long-term downtime

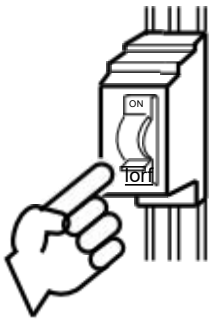

- When the compressor is not used for a long time, the leakage protection circuit breaker should be disconnected to cut off the power supply.

Drain receiver condensate and protect the unit from moisture and freezing during storage.

- When shutting down for a long time, the exhaust valve should be closed.

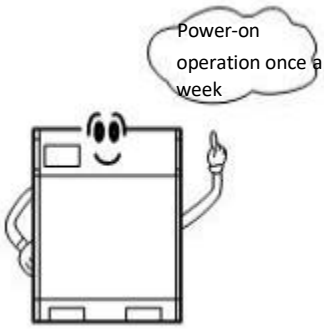

- It should be ensured that it is powered on once a week (about 20 minutes) to keep the compressor in good condition for reuse. For the operation method, refer to "3 Operation Method" on page 5-4.

- If an abnormal phenomenon is found, repair it for reuse.

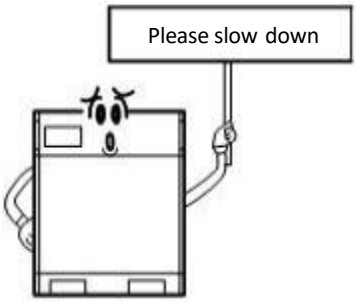

- Please refer to "3 Operation Method" on page 5-4. Follow the prescribed steps to resume operation.

- Never place the compressor outdoors.



Attention

- When the compressor unit is not powered on for a long time, the compressor oil on the surface of the friction pair may be lost. When the machine is turned on again, friction is likely to occur, causing serious damage to the unit.

Therefore, the unit hasn't been running for a long time, please contact our company's after-sales service department before starting it up again, and start it correctly.

9 . Compressor disposal

When disposing of the compressor, drain the lubricant.
For details, please contact our company's after-sales service department and agent.

10. Warranty

The Quick Lift USA OEM compressor carries a two-year manufacturer warranty. The warranty terms state that the warranty period begins on the date of manufacture shown on the compressor nameplate. Refer to the written warranty supplied with the sale for controlling coverage and terms.

Coverage applies to defects in materials or workmanship under normal operating conditions.

Routine maintenance items, including air filters, oil filters, oil separator elements and compressor oil, are normal-service consumables. Replacement of these items is not a manufacturing-defect repair.

Damage caused by improper use, incorrect oil or filters, missed maintenance, unsuitable ambient conditions, contamination or unauthorized disassembly, repair or modification is excluded under these warranty terms.

Keep the operating manual, proof of purchase, serial number and maintenance records. Contact Quick Lift USA before arranging a warranty repair.

Warranty service & receiving inspection

Once a defective part is confirmed to be covered, the manufacturer provides the replacement part under its warranty terms. The warranty terms assign technician travel expenses, including travel time and transportation, to the customer.

Retain and follow the operating and maintenance instructions. Proper operation and timely maintenance support reliable service and warranty eligibility.

At delivery, inspect the shipment for visible damage and verify the quantity received. Document shipping damage before signing the delivery receipt and notify Quick Lift USA promptly.

For service, provide the model, serial number, operating hours, fault message and photographs.

Quick Lift USA | 3380 S Power Rd #105, Gilbert, AZ 85234
602-828-0950 | INFO@QUICKLIFTUSA.COM

11. Service terms

The warranty excludes compensation for lost profits, business interruption, work stoppage, raw-material or product losses and similar indirect losses associated with equipment failure or replacement.

Refer to the written sales agreement and warranty for applicable commercial terms. Contact Quick Lift USA if the shipped equipment differs from the instructions or if replacement components cannot be identified.

Service record

Model	QL-10HP
Serial number	_____
Date / operating hours	_____
Inspection and work performed	_____ _____ _____
Parts / oil used	_____ _____
Technician	_____
Next service due	_____

Quick Lift USA | 602-828-0950 | QUICKLIFTUSA.COM

Manufactured by Sollant for Quick Lift USA.

4-in-1 system operation

Before starting, inspect receiver and filter drains, check oil level, open required system valves and confirm that cooling openings are clear. Do not operate with damaged hoses, filter bowls, guards or pressure-protection devices.

Operate the refrigerated dryer using its installed controls and instructions. Allow it to establish normal operation before supplying air to moisture-sensitive equipment. Confirm normal dryer indication and drainage during use.

Start the compressor using the normal controller sequence. Monitor pressure, discharge temperature, dryer status, leakage and condensate discharge. Stop and investigate abnormal conditions.

A refrigerated dryer reduces moisture; it does not make air suitable for breathing, medical use or every process. Select downstream treatment to meet the application requirements.

For normal shutdown, stop the compressor and allow its programmed unloading sequence to finish. Follow the dryer shutdown procedure. Isolate and depressurize before service.

Dryer, filters & condensate maintenance

Daily	Check dryer operation, leaks and condensate discharge. Inspect receiver and filter drains.
Drain service	Isolate electrical and air supplies, verify zero pressure and clean or replace drain components as required.
Filter elements	Inspect restriction indicators where fitted. Replace elements according to their installed service instructions and operating conditions.
Dryer condenser	Keep ventilation openings and condenser surfaces clean. Disconnect and lock out power before cleaning.
Refrigeration circuit	Only qualified refrigeration personnel may service refrigerant, sealed-system components and associated electrical equipment.
Service records	Record operating hours, alarms, element changes, drain service and dryer maintenance.

Do not remove a filter bowl, drain or pipe fitting while pressurized. Do not alter dryer settings or refrigeration components without the matching service instructions.

4-in-1 troubleshooting

Water downstream	Check dryer operation and load, ambient conditions, inlet temperature, condensate drains and piping low points.
High pressure drop	Inspect filter elements, valves, hose sizing and dryer flow capacity. Service restrictions with power isolated and zero pressure verified.
Drain does not discharge	Check for a blocked outlet, contamination or failed drain mechanism. Isolate and depressurize before repair.
Drain leaks continuously	Inspect the drain and sealing surfaces after safe isolation. Replace damaged parts.
Dryer alarm / poor cooling	Check ventilation and condenser cleanliness. Record the indication and contact qualified service.
Abnormal compressor operation	Stop the compressor and follow the owner troubleshooting section. Do not repeatedly reset protective faults.

Contact Quick Lift USA with the model, serial number, operating hours and displayed alarm.

Parts identification & ordering

Match the numbered callout on each exploded view to its factory part-number table. Provide the model, serial number, part number and component photograph when ordering.

Metric fastener and thread designations identify exact replacement parts. Inch tube-size equivalents do not authorize substituting inch-series hardware or NPT fittings.

3380 S Power Rd #105, Gilbert, AZ 85234
602-828-0950 | INFO@QUICKLIFTUSA.COM



2.Sheet metal assembly

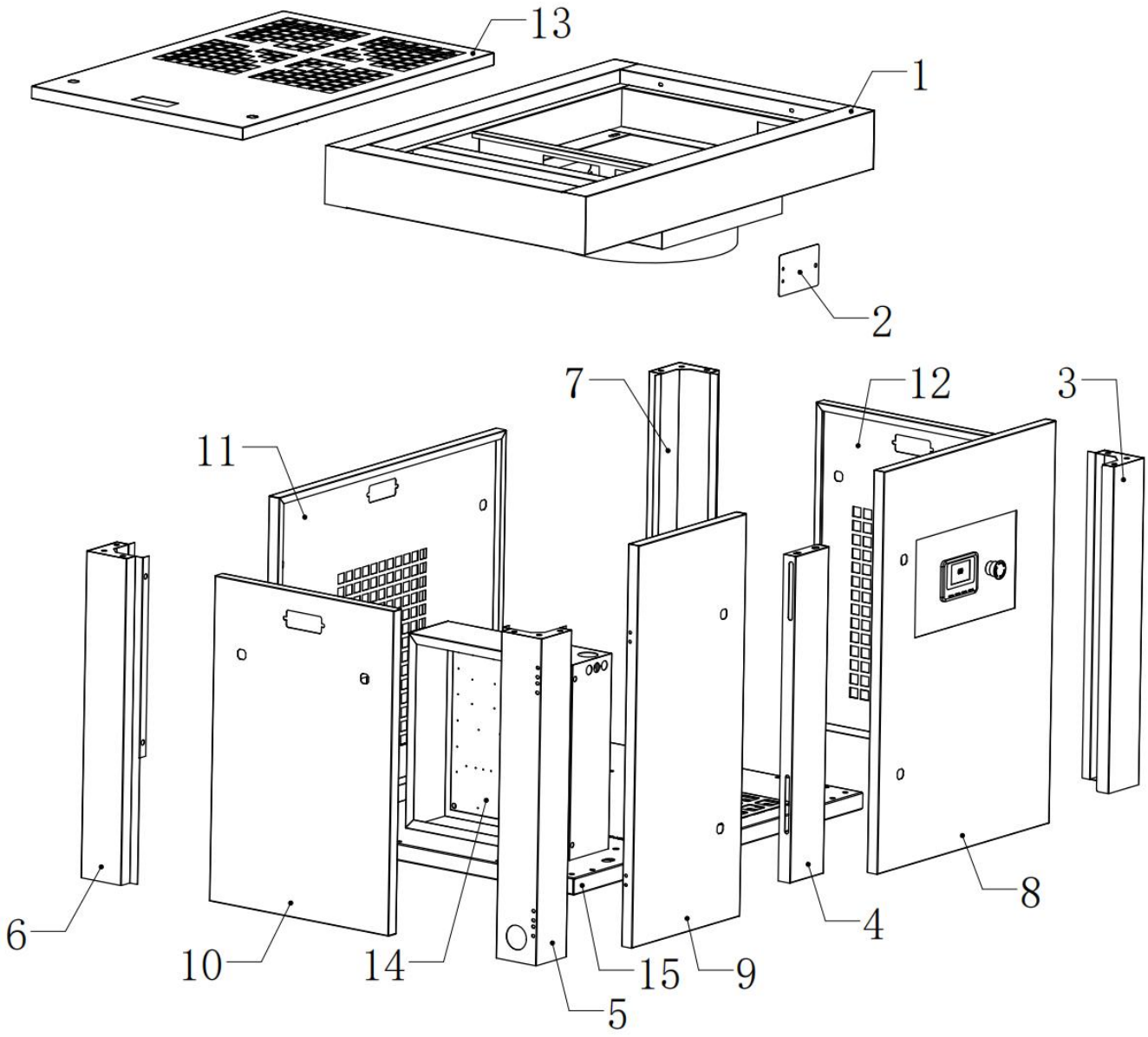

Item	Part No.	Description	Qty
1	SLTI-7.5F01200001-01-01-00	Top cover	1
2	SLT-7.5F01200001-01-01-01	Top cover fan viewing panel	1
3	SLT-7.5F01200001-01-08-00	Column A	1
4	SLT-7.5F01200001-01-12-00	Center column E	1
5	SLT-7.5F01200001-01-09-00	Column B	1
6	SLT-7.5F01200001-01-10-00	Column C	1
7	SLT-7.5F01200001-01-11-00	Column D	1
8	SLT-7.5F01200001-01-03-00	Controller door plate	1
9	SLT-7.5F01200001-01-04-00	Front left door panel	1
10	SLT-7.5F01200001-01-06-00	Left Side Door Panel	1
11	SLT-7.5F01200001-01-05-00	Rear Side Door Panel	1
12	SLT-7.5F01200001-01-07-00	Right Side Door Panel	1
13	SLT-7.5F01200001-01-02-00	Top door panel	1
14	SLT-7.5V01150003-03-01	Electric box	1
15	SLTI-5.5V01200001-02-01-00	Chassis	1

3.Pipe assembly

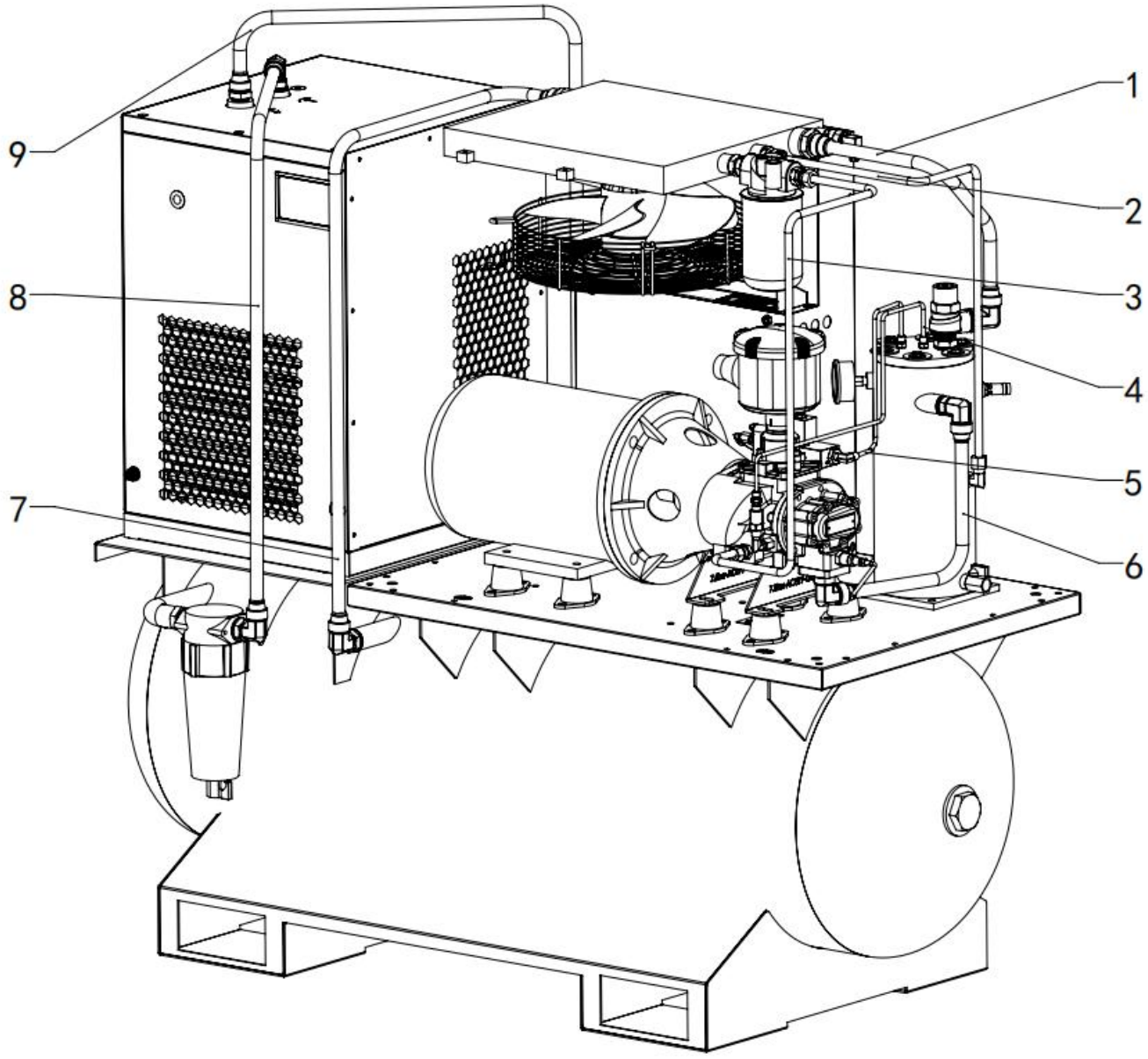

Item	Part No.	Description	Qty
1	SLTI-7.5V01200015-04-01	Exhaust pipe-0.787 in.	1
2	SLTI-7.5V01200015-04-02	Oil and air receiver outlet pipe-0.472 in.	1
3	SLTI-7.5V01200015-04-04	Main engine oil return pipe-0.472 in.	1
4	SLTI-7.5V01200015-04-05	Secondary oil return pipe-0.236 in.	1
5	SLTI-7.5V01200015-04-06	Pneumatic control tube-0.236 in.	1
6	SLTI-7.5V01200015-04-03	Flange pipe-0.787 in.	1
7	SLTI-7.5V01200015-04-17	Rear exhaust pipe-0.787 in.	1
8	SLTI-7.5V01200015-04-18	Refrigerated dryer intake pipe-0.787 in.	1
9	SLTI-7.5V01200015-04-19	Refrigerated dryer exhaust pipe-0.787 in.	1

4.Other components

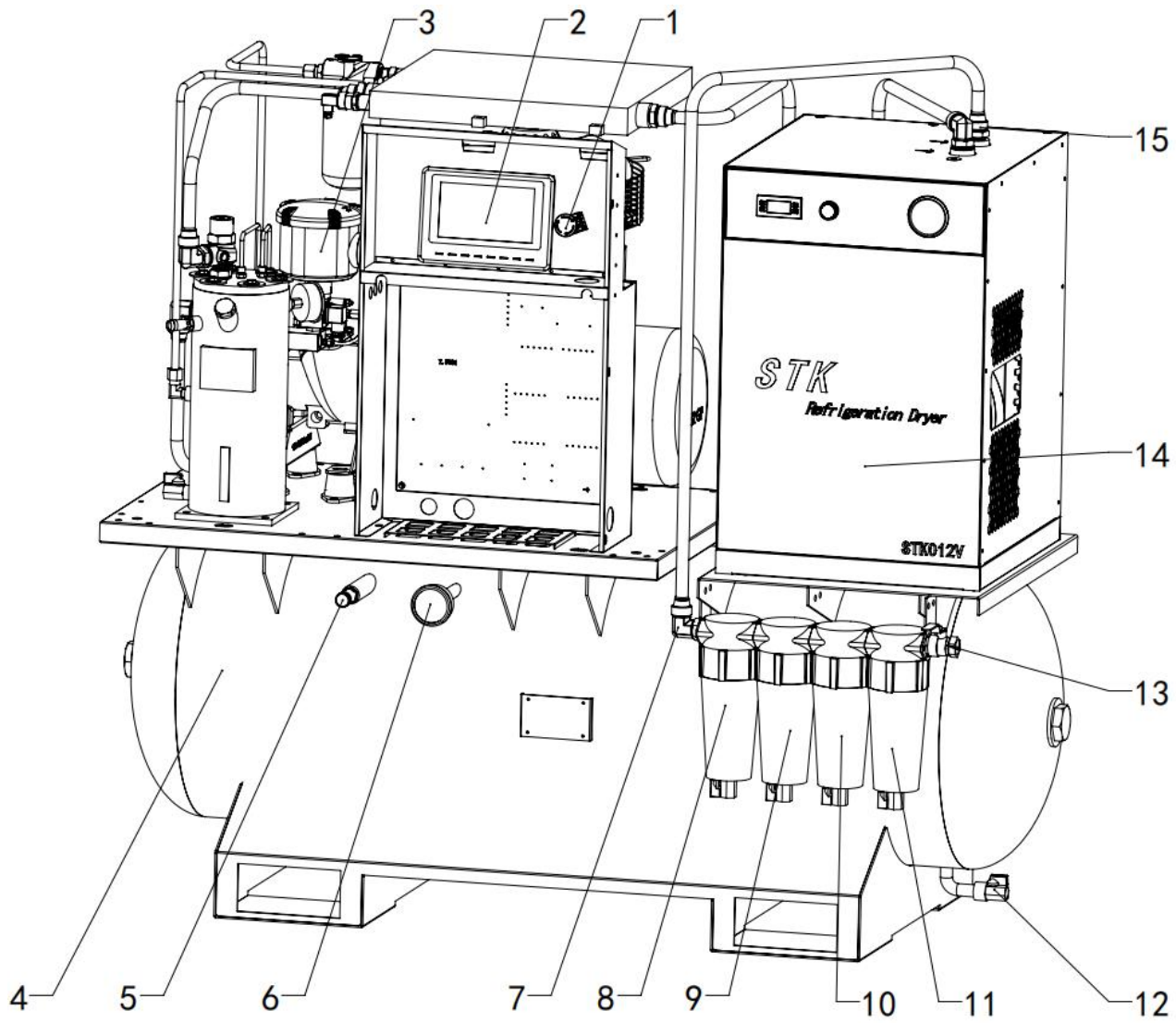

Item	Part No.	Description	Qty	Item	Part No.	Description	Qty
1	0106060101001	Emergency stop button	1	10	0104070201003	Precision Filter A	1
2	0101080103001	Controller	1	11	0104070201004	Precision Filter X	1
3	0104010101001	Air filter assembly	1	12	0103070101002	Ball Valve 1	6
4	0104060302003	Horizontal air receiver	1	13	0103070401001	Ball Valve 2	1
5	0103050104008	Safety Valve	1	14	0104040201001	Refrigerated dryer	1
6	0105010101001	Pressure gauge	1	15	0107030101003	Straight Tube Fitting	1
7	0107030102004	Right Angle Tube Fitting	4	16	0104070201005	Precision Filter F	1
8	0104070201001	Precision Filter C	1	17	0107030103001	Straight Tube Fitting	1
9	0104070201002	Precision Filter T	1				

5.The motor assembly of the body

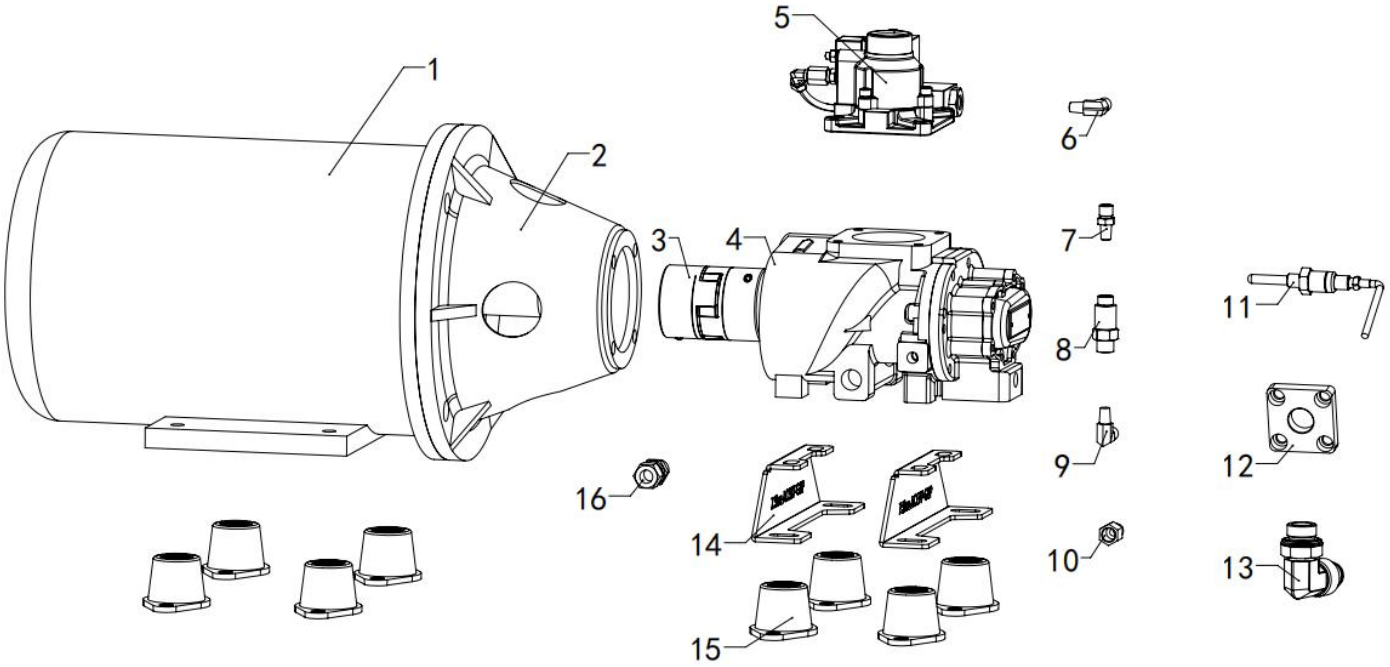

Item	Part No.	Description	Qty
1	0101020202002	Motor	1
2	0102040101004	Center Bracket	1
3	0102010101001	Coupling	1
4	0101010201049	Air end	1
5	0103010101001	Inlet Valve	1
6	0107020102001	Right Angle Tube Fitting	1
7	0107020101001	Straight Tube Fitting	1
8	0103060101005	Check Valve	1
9	0107020103006	Right Angle Tube Fitting	1
10	0107020103013	Straight Tube Fitting	1
11	0105020102001	Temperature Sensor	1
12	0107060101001	Ring flange	1
13	0107030102004	Right Angle Tube Fitting	1
14	SLTI-5.5V01200001-02-02-00	Machine Bracket	2
15	0109010101007	Shock Absorber	8
16	0107020101005	Straight Tube Fitting	1

6.Cooler assembly

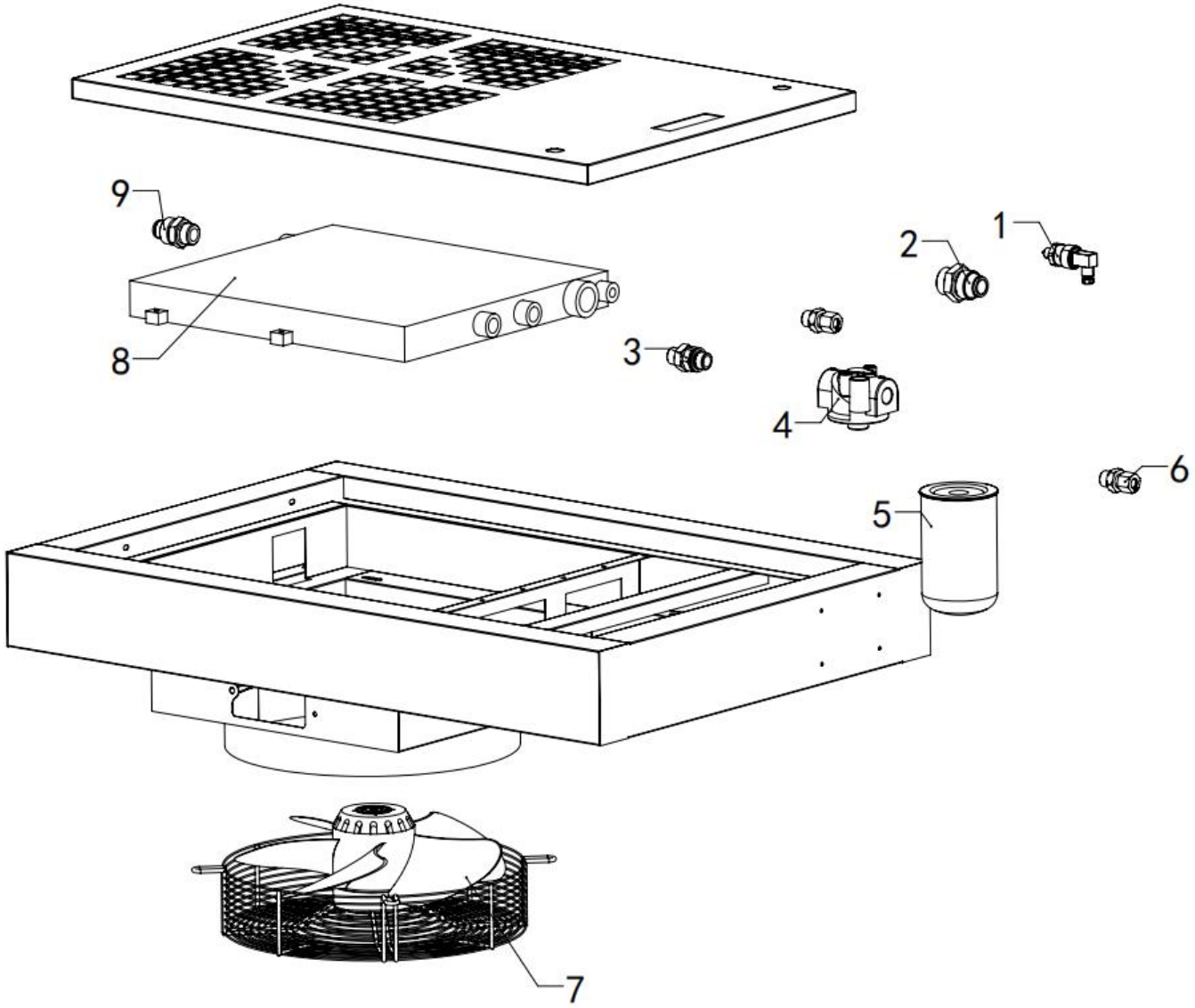

Item	Part No.	Description	Qty
1	0105030102005	Pressure Sensor	1
2	0107030101004	Straight Tube Fitting	1
3	0107020103002	Reducing Tube Fitting	1
4	0103030101003	Oil filter holder	1
5	0104020101002	Oil Filter	1
6	0107020101006	Straight Tube Fittings	2
7	0101060102007	Fan	1
8	0101050101001	Radiator	1
9	0107030101003	Straight Tube Fitting	1

7.Oil separation barrel assembly

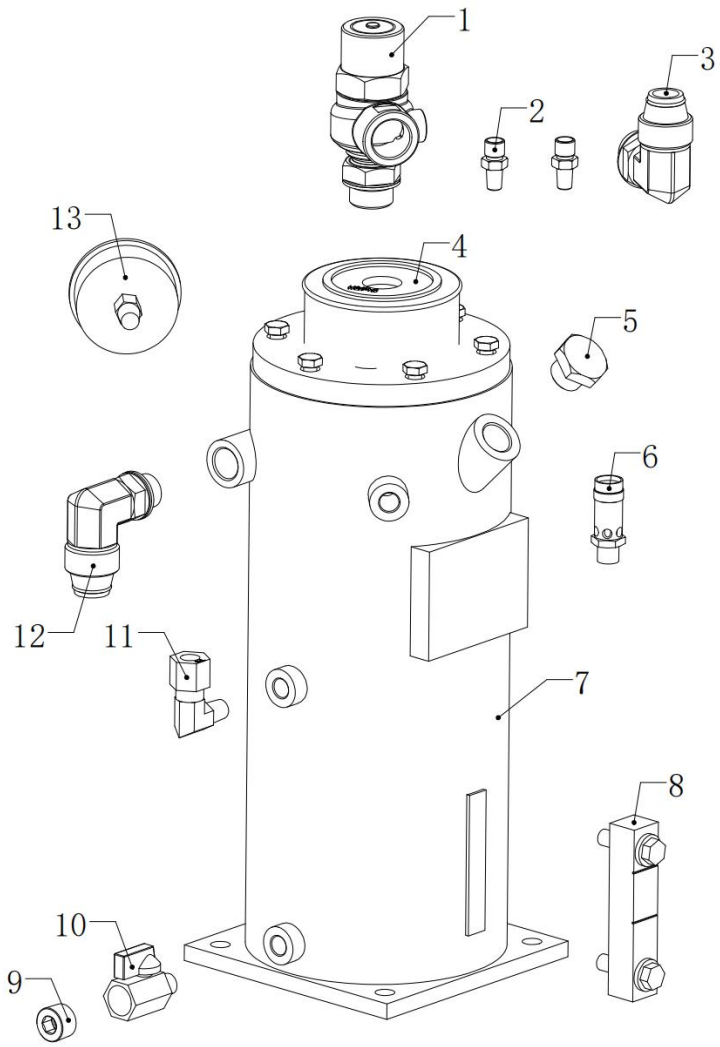

Item	Part No.	Description	Qty	Item	Part No.	Description	Qty
1	0103020101001	Minimum Pressure Valves	1	8	0105040101001	Oil sight glass	1
2	0107020101003	Straight Tube Fittings	2	9	0103070101004	Ball Valve Plugs	1
3	0107030102004	Right Angle Tube Fitting	1	10	0103070101002	Ball Valve	1
4	0104030101001	Oil Separator	1	11	0107020102005	Right Angle Tube Fitting	1
5	0107040102002	Plug	1	12	0107030102001	Right Angle Tube Fitting	1
6	0103050102005	Safety Valve	1	13	0105010101001	Pressure Gauge	1
7	0101030403003	Oil/air separator tank	1				

8.Electrical Components

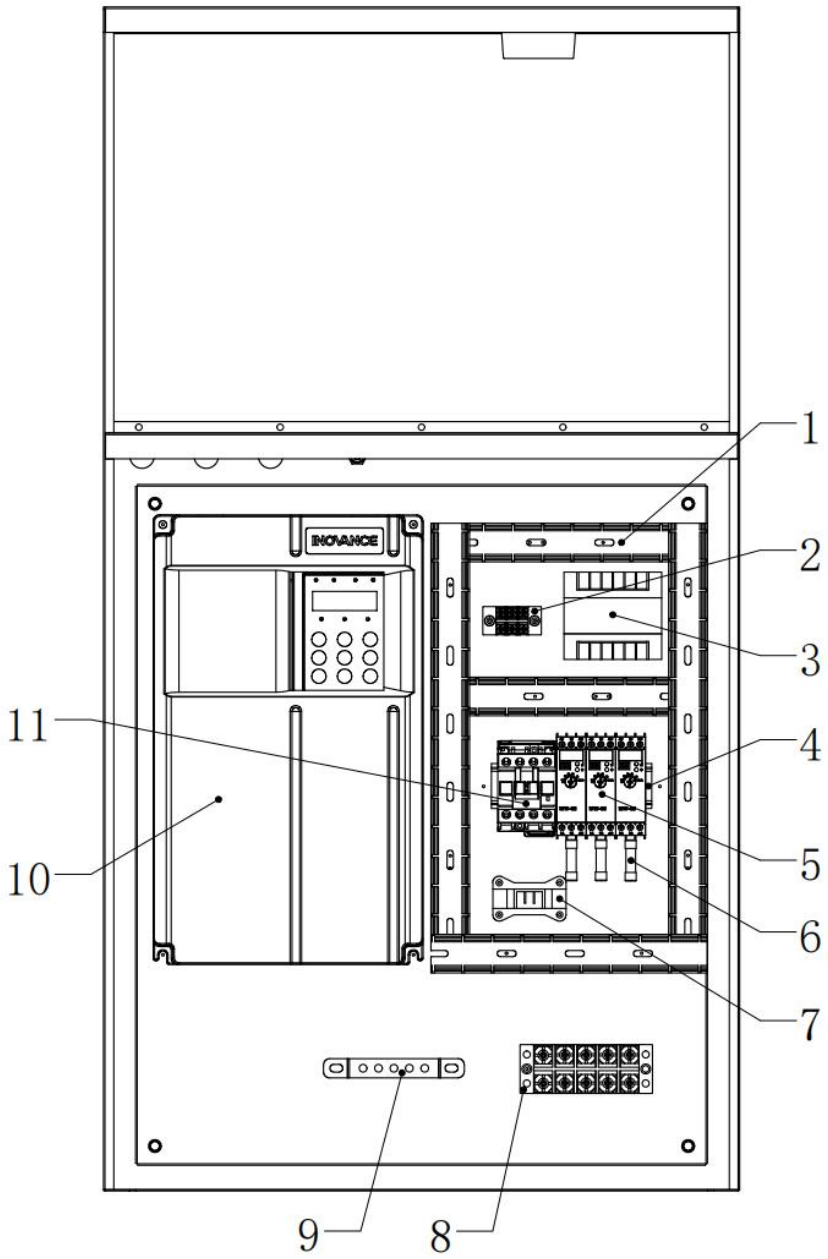

Item	Part No.	Description	Qty	Item	Part No.	Description	Qty
1	0106090101001	Wire Channel	5	7	0106090108005	Instrument transformer	1
2	0106040101001	Main Inlet Terminal Block	1	8	0106040101019	Main Inlet Terminal Block	1
3	0106020104001	Transformer	1	9	0106090109001	Ground Copper	1
4	0106090102001	Guide rails	1	10	0101070301008	Instrument transformer	1
5	0106080105001	Fuse holder	3	11	0101070301008	Contactor	1
6	0106080104001	Fuse body	3				

Engineering Data Model	Unit	QL-10HP
GENERAL OPERATING CONDITION		
Compression Gas	-	Air
Suction Pressure	PSI	14.692
Location	-	Indoor
Ambient Temperature	℉	Max.113
Humidity	%	Below 80
GENERAL COMPRESSOR DATA		
Free Air Delivery [FAD]	CFM	12.71-31.9
Maximum Operating Pressure	PSI	145
Minimum Operating Pressure	PSI	65.3
Maximum Operating Temperature	℉	113
AIREND DATA		
Model	-	0101010201049
Type	-	Oil Injected, Single Stage
Compression Method	-	Rotary positive displacement
Rotor lobe combination	-	/
Male Rotor Diameter	In	2.63
Capacity Control Method	-	Load-Unload Control by PT
Cooling Method	-	Oil Cooled
Air Cleaning System	-	10micron/99.9% Dry Paper
Oil Filtering System	-	10 micron/99.9% Spin-on Cartridge
Drive method	-	Direct Coupled
ELECTRICAL DATA		
Nominal Power - Main Drive	HP	10
- Fan Motor	HP	0.2948
Maximum Applied Power	HP	10
Main Motor Enclosure		IP55
Main Motor Service Factor	-	1.2
Main Motor Speed	rpm	3000
Main Motor Efficiency	%	94.5
Main Motor Power Factor	%	95
Fan Motor Efficiency	%	45
Fan Motor Power Factor	%	65
INVERTER DATA		
Maker		
Inverter Model		0101070301008

Engineering Data Model	Unit	QL-10HP
COOLING DATA		
Ambient Temperature	℉	113
Max. Airend Discharge Temperature	℉	194
Heat Removal-Oil Cooler	BTU/hr	47,734
Heat Removal-After Cooler	BTU/hr	10,229
Oil Flow	US gal/min	4.225
Cooling Air Flow	CFM	84.75
Service Air Temperature	℉	Amb.+15
Cooling Water Flow	US gal/min	N/A
Cooling Water Inlet Temp. Max.	℉	N/A
Cooling Water Nozzle Size	A	N/A
SOUND LEVEL		
Without Ventilation Duct	dB(A)	60±2
With Ventilation Duct	dB(A)	57±2
Total Coolant Fill Capacity	US qt	4.23
DIMENSION & INSTALLATION		
Air Delivery Pipe	A[B]	G 3/4
Overall Length	In	66.3
Overall Width	In	28.52
Overall Height	In	57.09
SHIPPING DATA		
Dry Weight	lb	1,124.36

Note

1. FAD[Free Air Delivery] is full package performance including all losses. [T ested in accordance with ISO1217:1996 Annex C.]

Tolerance of Volume Flow Rate at specified conditions

Below 17.67 CFM	+/-7 %
17.67 to 52.94 CFM	+/-6 %
52.94 to 529.72 CFM	+/-5 %
Above 529.72 CFM	+/-4 %

The volume of compressed air delivered by an air compressor at its discharge pressure normally is stated in terms of prevailing atmospheric inlet conditions

2. Sound level is measured in free field conditions in accordance with PNEUROP/CAGI test codes.

Outside Drawing

QL-10HP

220V 60HZ

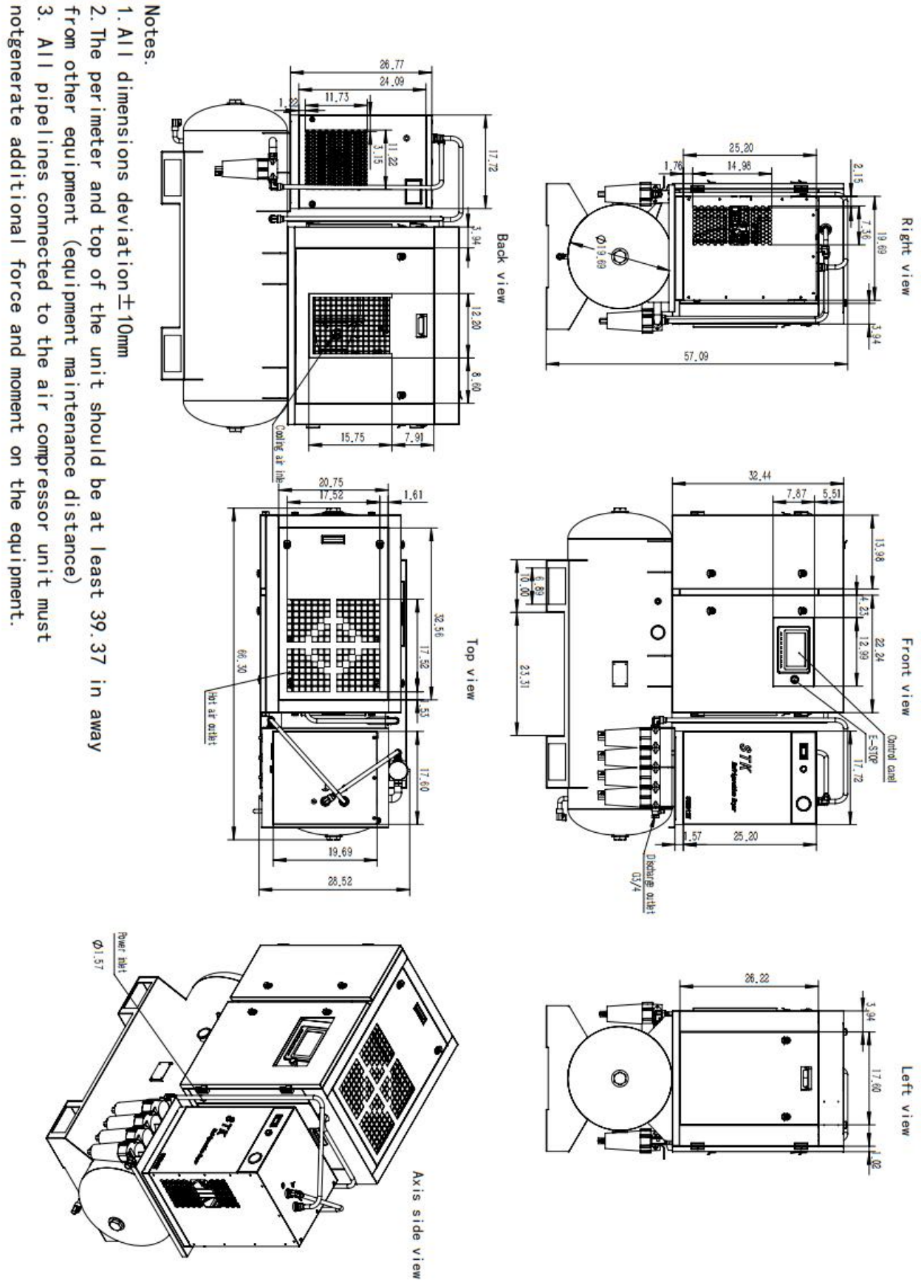

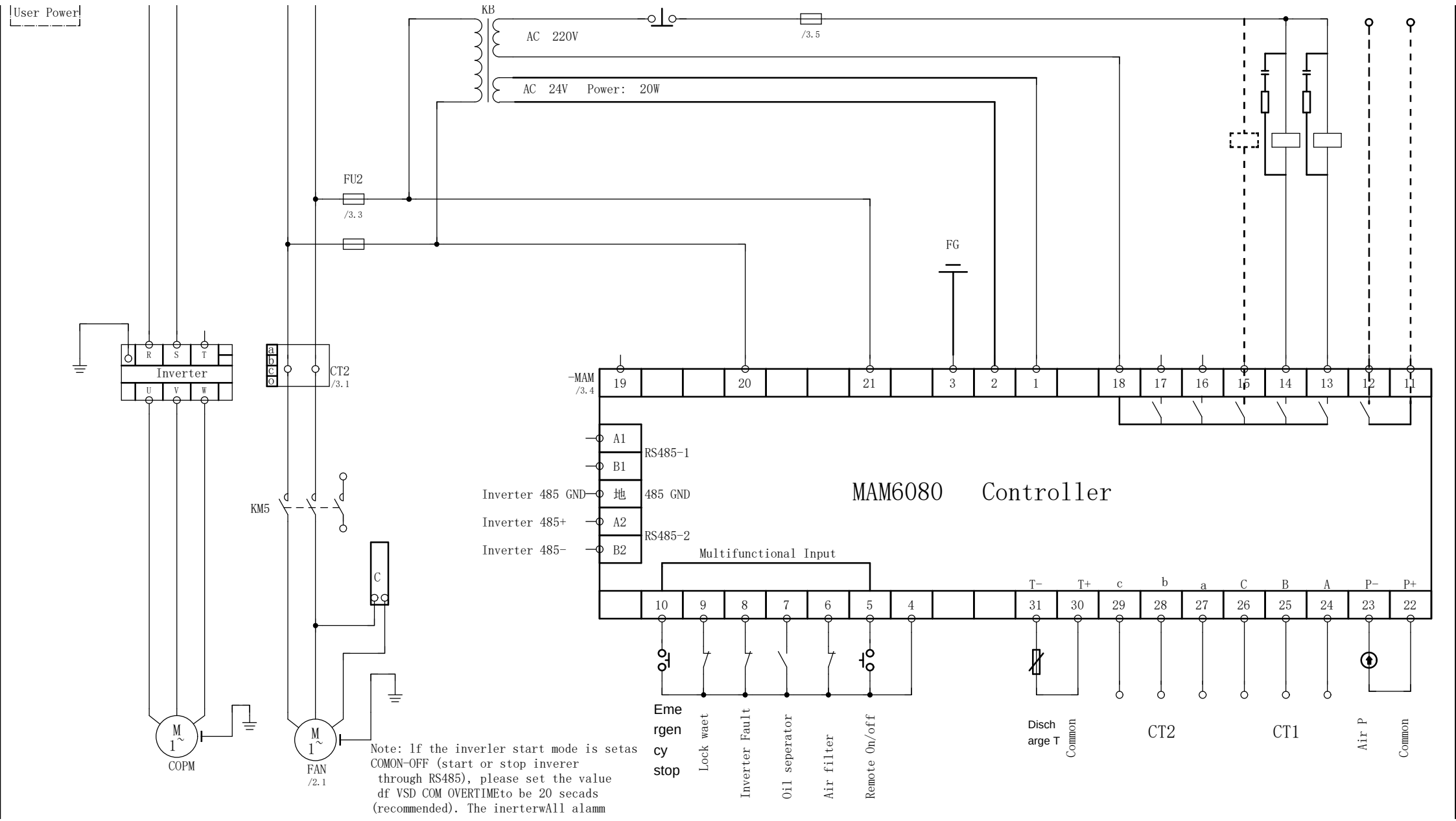
User Power
KB
AC 220V
/3.5
AC 24V Power: 20W
FU2
/3.3
FG
R
S
T
Inverter
U
V
W
CT2
/3.1
-MAM
/3.4
19
20
21
3
2
1
18
17
16
15
14
13
12
11
A1
B1
RS485-1
Inverter 485 GND
地
485 GND
Inverter 485+
A2
Inverter 485-
B2
RS485-2
MAM6080 Controller
Multifunctional Input
KM5
C
10
9
8
7
6
5
4
T-
T+
c
b
a
C
B
A
P-
P+
31
30
29
28
27
26
25
24
23
22
M
1~
COPM
M
1~
FAN
/2.1
Note: lf the inverler start mode is setas
COMON-OFF (start or stop inverer
through RS485), please set the value
df VSD COM OVERTIMEto be 20 secads
(recommended). The inerterwAll alamm
Eme
rgen
cy
stop
Lock waet
Inverter Fault
Oil seperator
Air filter
Remote On/off
Disch
arge T
Common
CT2
CT1
Air P
Common

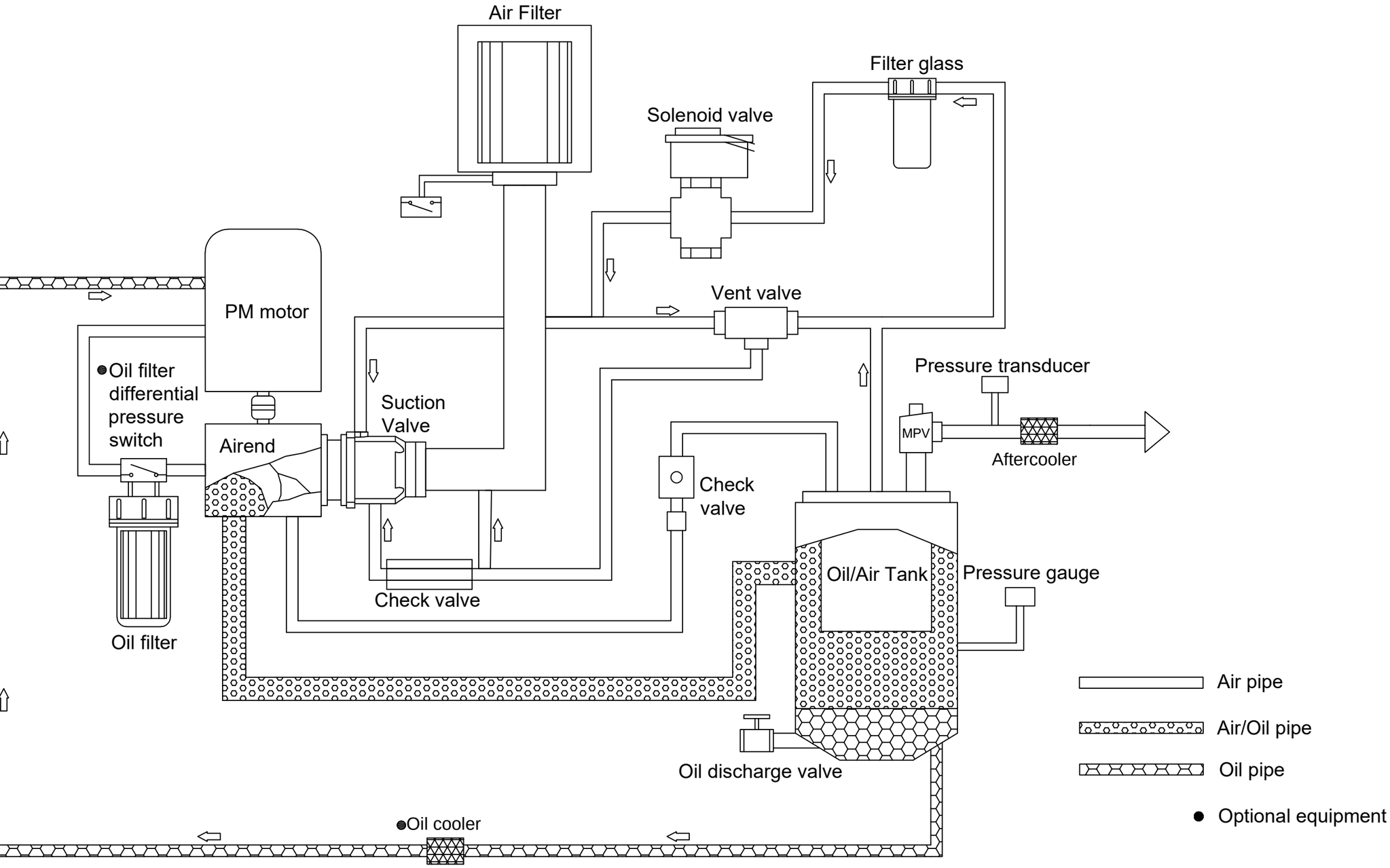

Control flow Diagram	Ratio	Number	Materrial	

Engineering specifications

Configuration	Compressor / dryer / receiver / precision filters
Air receiver	60 US gal / ASME certified
Total compressor oil fill	4.23 US qt
Oil circulation	4.225 US gal/min
Cooling airflow	84.75 CFM
Maximum ambient temperature	113°F
Power supply	220 V / 60 Hz / single-phase

G/BSPP fittings are not NPT. Use connections matched to the installed equipment. Electrical protection and conductors must be sized by a qualified electrician.