Installation and Owner Manual

QL15KCF

15,000 lb two-post clear-floor vehicle lift



Read this manual and all warning labels before installing, operating, or servicing the lift. Keep these instructions available to every operator.

Safety, Warranty, and Contact

Only trained, authorized operators may use this lift. Read the entire manual and all warning labels before installing, operating, or servicing it. Failure to follow these instructions can cause serious injury or death.

Use the lift only for vehicles within its 15,000 lb rated capacity and compatible with its arm reach, pad height, and manufacturer-recommended lifting points. Verify that all four pads contact the vehicle correctly and that every arm restraint engages.

Raise the vehicle slightly and verify stability before continuing. Lower the vehicle onto the mechanical safety locks before performing service. Never work under a vehicle supported only by hydraulic pressure.

Inspect the lift before use. Stop operation if you find damaged components, loose anchors, hydraulic leaks, uneven lifting, or a safety device that does not work correctly. Disconnect and secure the power supply before maintenance or repair.

Warranty: Quick Lift USA automatically provides a two-year warranty on all non-wearable parts. Coverage begins on the date of purchase. No registration form or other paperwork is required to activate the warranty.

For service and warranty assistance, contact Quick Lift USA at 602-828-0950 or www.quickliftusa.com. Our address is 3380 S. Power Rd. #105, Gilbert, AZ 85234.

Contents

SECTION	PAGE
Safety, warranty, and contact	2
Operator safety	4
Features and technical specifications	6
Arm positioning and installation requirements	9
Installation steps	13
Assembly drawings and parts	37
Hydraulic reference and startup	43
Operating and lowering the lift	47
Inspection and maintenance	49
Troubleshooting	50
Disposal and service information	51

Operator Safety

Install and use the lift indoors only. Keep the work area clean, dry, and clear of obstacles, oil, grease, and debris. Operate only between 41°F and 104°F. Keep controls clean and dry, and wear suitable clothing and non-slip protective footwear.

Keep hands, feet, and other body parts clear of moving components. No one may remain inside the vehicle while it is being lifted. Keep customers and other bystanders outside the lift area during operation.

Before driving in or out, fully lower the lift, retract the arms, and swing the arms and pads clear of the vehicle path. Never strike or drive over an arm or lifting pad.

Keep all safety devices and warning labels in place. Do not operate a lift with missing or damaged parts. Do not modify the lift. Repairs must be performed by qualified, authorized technicians using the correct replacement parts.

Ground the lift correctly. The equipment grounding conductor must connect to the designated ground connection. Disconnect and secure the electrical supply before opening electrical components or making repairs.

Do not operate near flammable gases or vapors. Electrical components can produce sparks. Stay alert during operation. If a vehicle becomes unstable or appears likely to fall, keep everyone clear of the lift.

Vehicle Stability and Warning Labels

Position the pads only at lifting points specified by the vehicle manufacturer. Use the supplied adapters or compatible saddle adapters when needed to make secure contact. Keep the vehicle centered between the columns.

Removing or installing heavy vehicle components can shift the center of gravity and make a raised vehicle unstable. Follow the vehicle manufacturer's service procedures and support requirements for the work being performed.

Before working beneath a raised vehicle, verify that both carriages rest securely on their mechanical safety locks. Before lowering, remove tool trays, stands, equipment, and other obstructions, then raise the lift slightly to unload and release the locks.

DANGER identifies a risk of death or serious injury. WARNING identifies unsafe practices that can cause death or serious injury. CAUTION identifies risks of injury or equipment damage. ATTENTION identifies conditions that can damage equipment or property.

Keep the operating instructions and safety reminders available to every operator. Inspect the lift daily and correct faults before returning it to service.

When receiving the lift, record missing items or shipping damage on the delivery paperwork. Refuse a damaged shipment when appropriate and contact Quick Lift USA for assistance.

Product Overview

The QL15KCF is a 15,000 lb two-post clear-floor lift with a reinforced structure for heavier vehicles within its rated capacity and lifting-point requirements. The overhead design keeps the floor between the columns open for vehicle service and shop equipment.

Dual direct-drive hydraulic cylinders use quality seals. Self-lubricating UHMW polyethylene sliders and bronze bushings help the carriages move smoothly. Equalizer cables keep both sides traveling together.

Four heavy-duty, symmetrical, two-stage arms accommodate the recommended lifting points on compatible vehicles. Automatic arm restraints secure the arms during lifting. Adjustable screw pads, 3 in. and 6 in. stackable extension adapters, and heavy-duty saddle adapters are included for compatible lifting points.

A single-point release operates both mechanical safety locks, and an overhead shut-off bar stops upward travel when contacted by the vehicle. Three column-height settings use one equalizer-cable set. The power unit is rated 2 HP and uses a 220V, single-phase supply.



Technical Specifications

The QL15KCF has three standard column-height settings. Lifting and safety-lock heights depend on the pad type, pad adjustment, and use of extension adapters; the next page lists the complete factory ranges.

SPECIFICATION	VALUE
Model / capacity	QL15KCF / 15,000 lb
Lifting time	84 seconds
Overall height: low / medium / high	174 / 186 / 198 in.
Overall width	150-3/4 in.
Drive-through clearance	109-3/4 in.
Width between columns	123-1/2 in.
Minimum height: rubber pad	6-7/8 in.
Minimum height: saddle adapter	7-1/16 in.
Gross weight	2,573 lb
Motor / power supply	2 HP / 220V, single-phase

Pad and Adapter Height Ranges

The following ranges apply to the two available pad styles. Pad adjustment changes the working height. Maximum lifting height is the highest pad position; maximum safety-lock height is the highest locked working position.

Use the pad or saddle adapter that fits the lifting points recommended by the vehicle manufacturer. Install extensions only in the approved arrangement.

CONFIGURATION	HEIGHT RANGE
Rubber pad: maximum lifting height	74-7/8 to 76-1/4 in. without extensions; 83-7/8 to 85-1/4 in. with extensions
Rubber pad: maximum safety-lock height	72-15/16 to 74-1/4 in. without extensions; 81-15/16 to 83-1/4 in. with extensions
Saddle adapter: maximum lifting height	75-1/16 to 76-3/8 in. without extensions; 84-1/16 to 85-3/8 in. with extensions
Saddle adapter: maximum safety-lock height	73-1/16 to 74-7/16 in. without extensions; 82-1/16 to 83-7/16 in. with extensions

Arm Positioning

Lower both carriages fully, retract the arms, and swing them out of the vehicle path before driving between the columns. Keep the vehicle centered and avoid contacting any lift component.

Each two-stage arm has a reach of approximately 43-1/16 to 66-3/8 in. Position all four pads at lifting points specified by the vehicle manufacturer. Figure 4 shows the vehicle drive-in direction and arm positions.

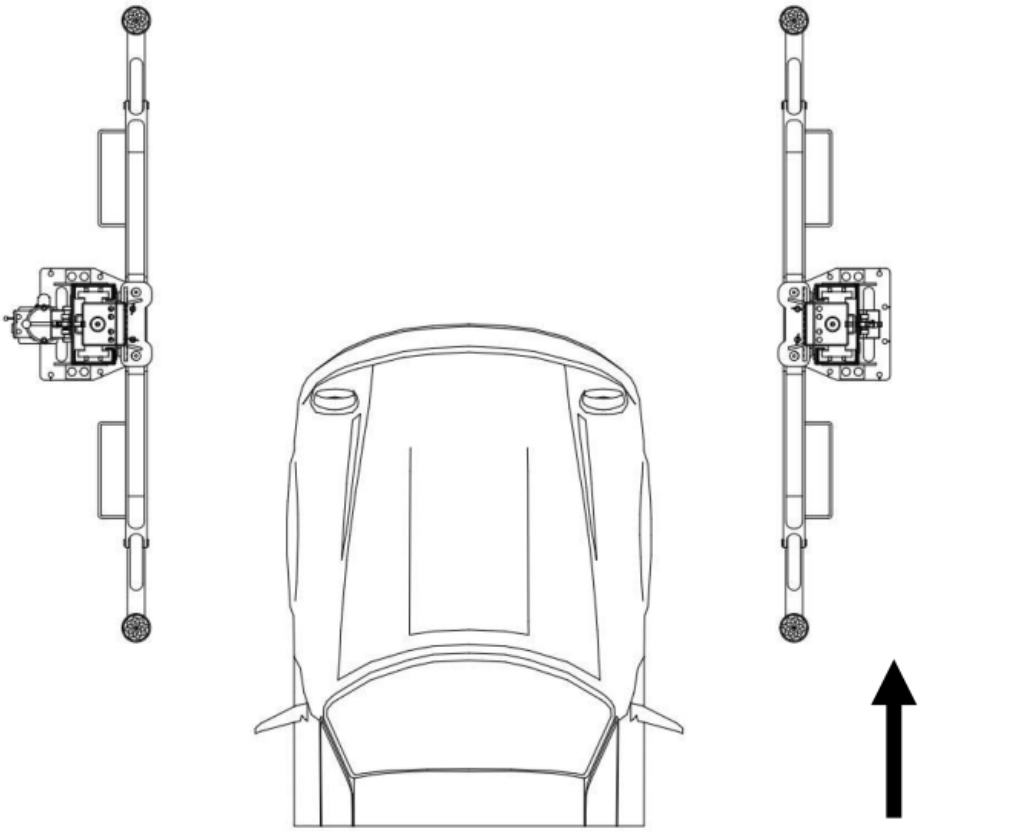

Fig. 4

Installation Tools

Prepare a rotary hammer drill with a 3/4 in. masonry bit, hammer, level, chalk line, screwdrivers, pliers, locking wrench, and a tape measure at least 24 ft 7-1/4 in. long.

Use a 12 in. adjustable wrench, a ratchet with a 28 mm socket, and wrenches in the following sizes: 10, 13, 14, 15, 17, 19, 24, 27, and 30 mm. Hex keys: 3, 5, and 8 mm. A 10 mm hex key is used when adjusting the arm restraints.

Use a forklift or hoist rated for the load.

Site and Foundation Requirements

Store and install the lift in a dry, shaded, well-ventilated indoor area. Do not install it outdoors, on asphalt, or on any surface other than concrete.

Concrete must be at least 6 in. thick, fully cured, level, free of cracks and holes, and rated at a minimum compressive strength of 3,500 psi. The factory foundation specification calls for concrete without reinforcing steel bars and specifies a minimum curing period of 15 days.

The installation floor must be flat and level. The factory limits the difference in floor elevation across the installation area to 3/8 in. Choose a different location if the floor cannot be leveled. Unsuitable concrete or improper anchoring can allow the lift or vehicle to fall.

Check the configured lift height, vehicle clearance, and overhead obstructions before selecting the installation location. The lift has low, medium, and high settings of 14 ft 6 in., 15 ft 6 in., and 16 ft 6 in. The ceiling must provide clearance above the installed lift.

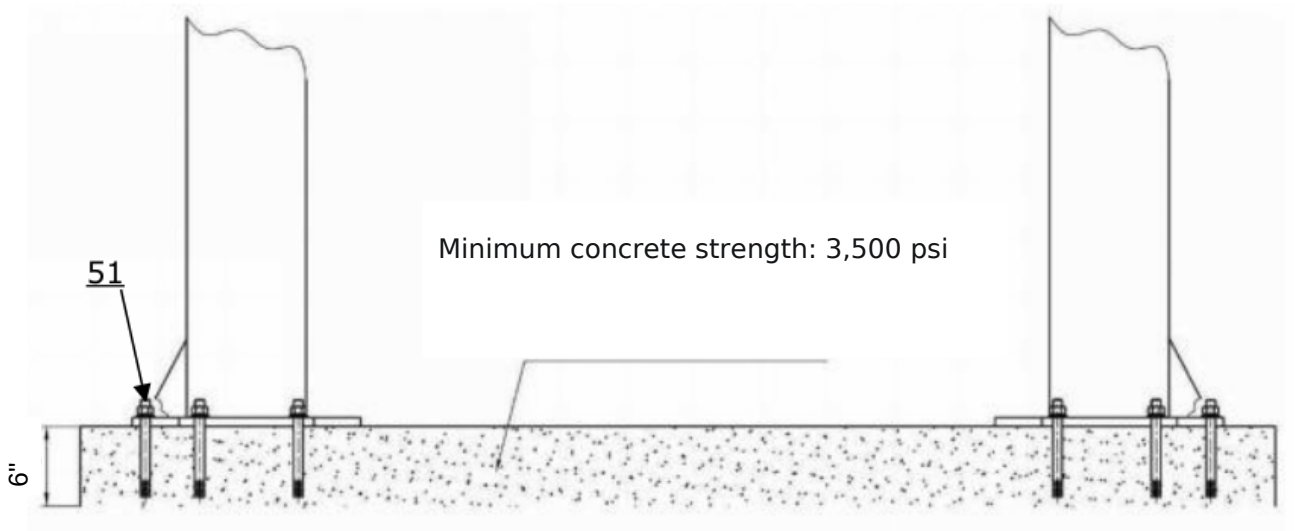

Electrical Supply and Receiving

The supplied power unit is rated 2 HP and requires a 220V, single-phase electrical supply. Use the voltage, frequency, and electrical ratings shown on the installed power-unit data plate.

A qualified electrician must confirm the supply, conductor sizing, grounding, and electrical connections. Keep power disconnected and secured throughout electrical installation.

Unload and move the packaged lift with a suitable forklift or hoist. Handle the columns, power unit, and loose parts carefully, and protect hydraulic and electrical components from damage.

Inspect the shipment before assembly. Compare all components with the supplied parts lists and report missing or damaged items. Do not install or operate the lift until all required components are present and in good condition.

Step A-B: Installation Layout

Confirm that the concrete, available space, configured height, and overhead clearance are suitable. Check for building supports, heaters, lights, electrical lines, and other overhead obstructions.

Figure 8 shows the installation layout and approach direction. Mark the baseplate positions with a chalk line as shown in Figure 9. Verify the 150-3/4 in. overall width before positioning the columns.

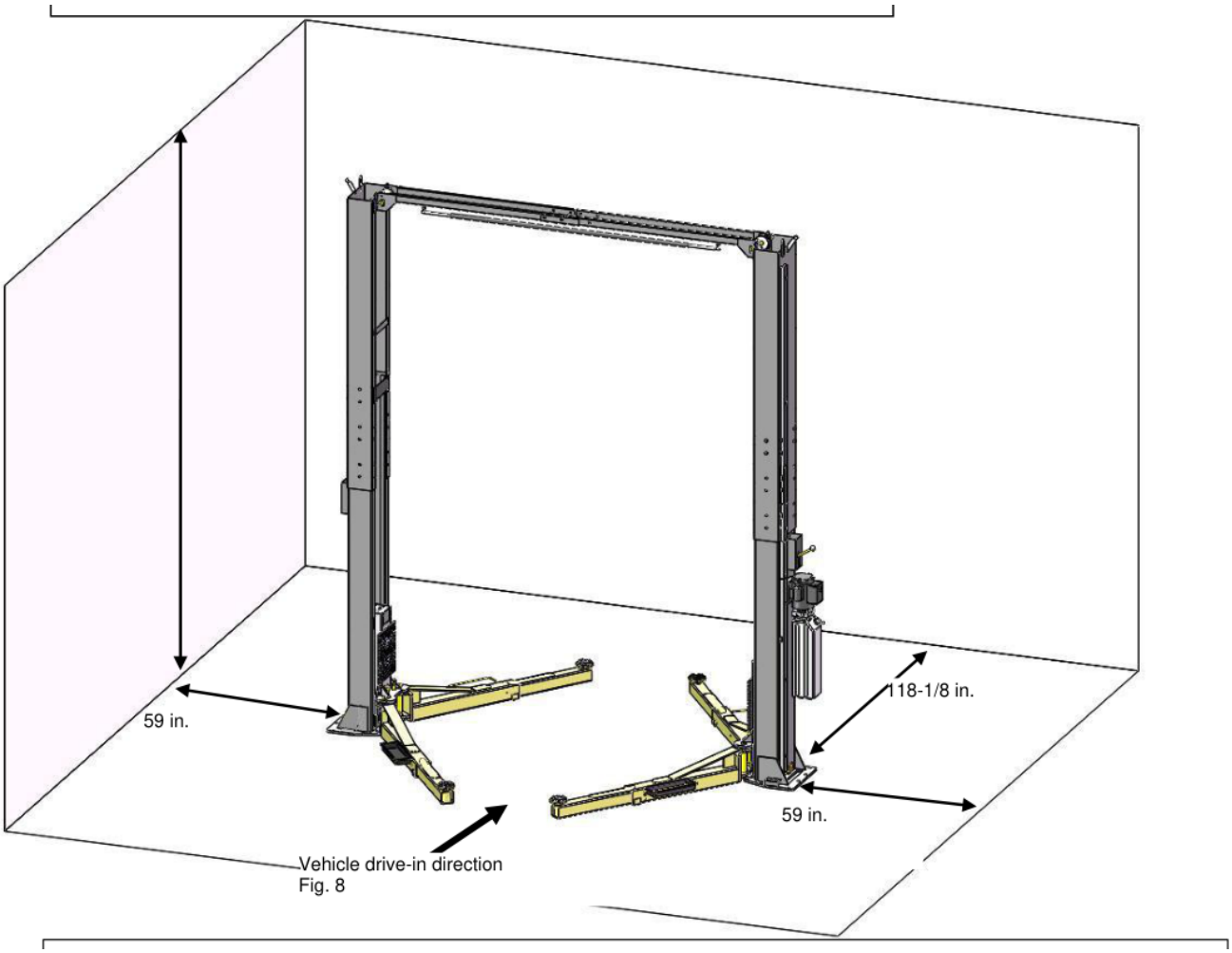

Fig. 8

Step C: Unpack the Lift

Identify the packaged lift and hydraulic power unit (Figure 10). Carefully open the packaging and compare the supplied components with the shipment list (Figure 11).

Remove both outer columns and set them near their installation positions. Keep the parts box, power unit, and loose components organized for assembly (Figure 12).

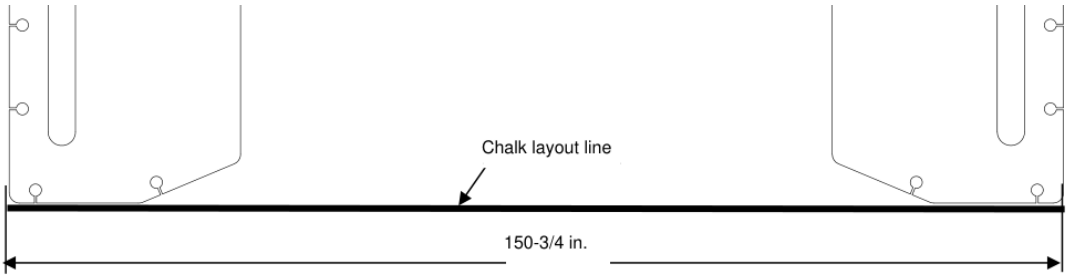



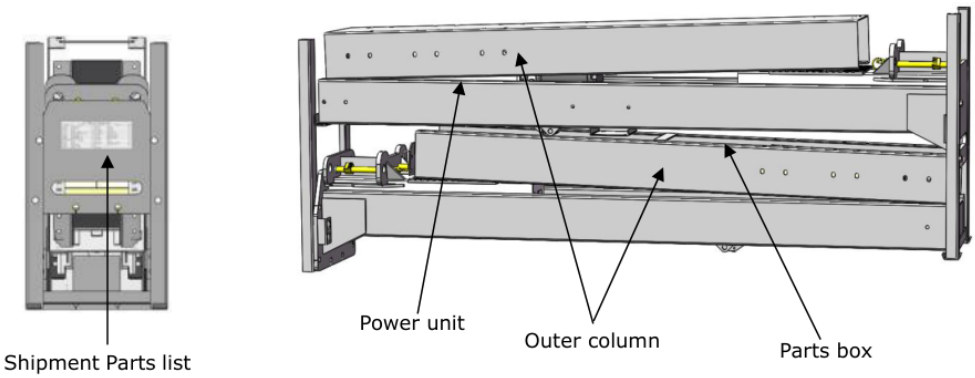

Step C: Check Supplied Components

Use a suitable forklift or hoist to support the upper column, loosen the upper shipping-bracket bolts, and remove the parts packed inside the column (Figure 13).

Support the lower column, remove the shipping bracket, and take out the remaining packed parts (Figure 14). Keep all components organized for the inventory check.

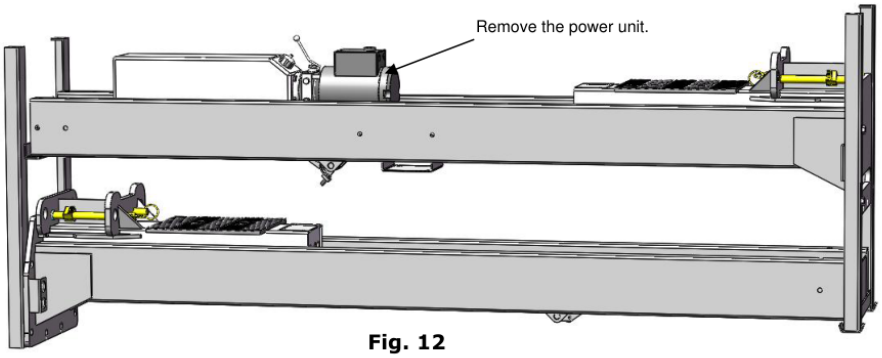

Fig. 12

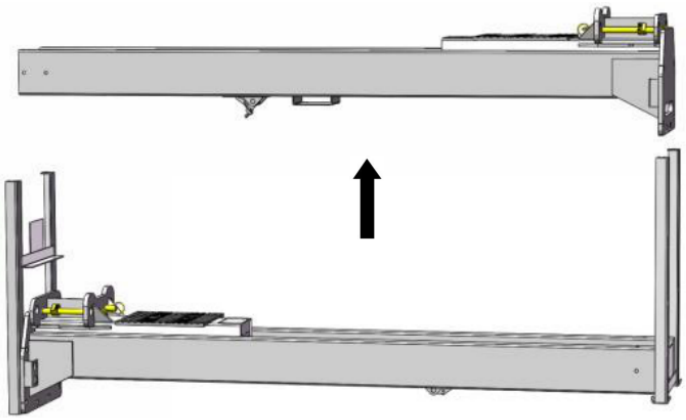

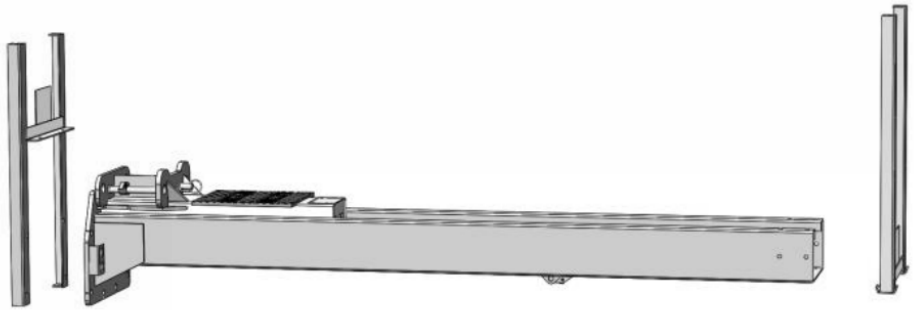

Step C: Check the Parts Inventory

Compare the unpacked components with the shipment list (Figures 15 and 16). Check hardware bags 1, 2, and 3 against the parts-bag lists shown in Figure 17. Report missing or damaged parts before assembly.

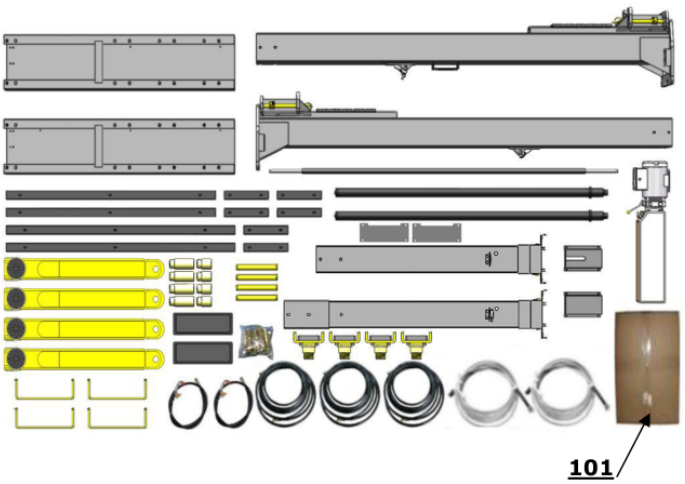

Fig. 15



Fig. 16
Parts of (101)

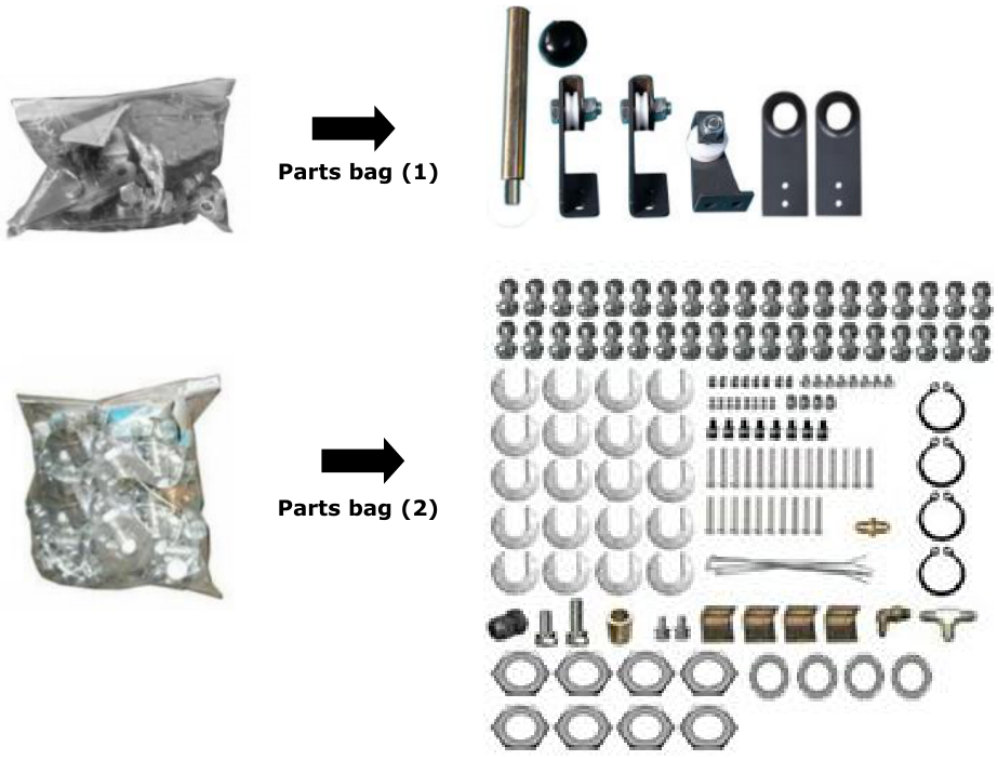

Fig. 17

Step D: Outer-Column Components

Match the outer-column components and fasteners to their assigned part numbers and installation locations.

Install the outer-column components using the arrangement shown in Figure 18. Use the specified M6*20 bolts, flat washers, lock washers, and nuts.

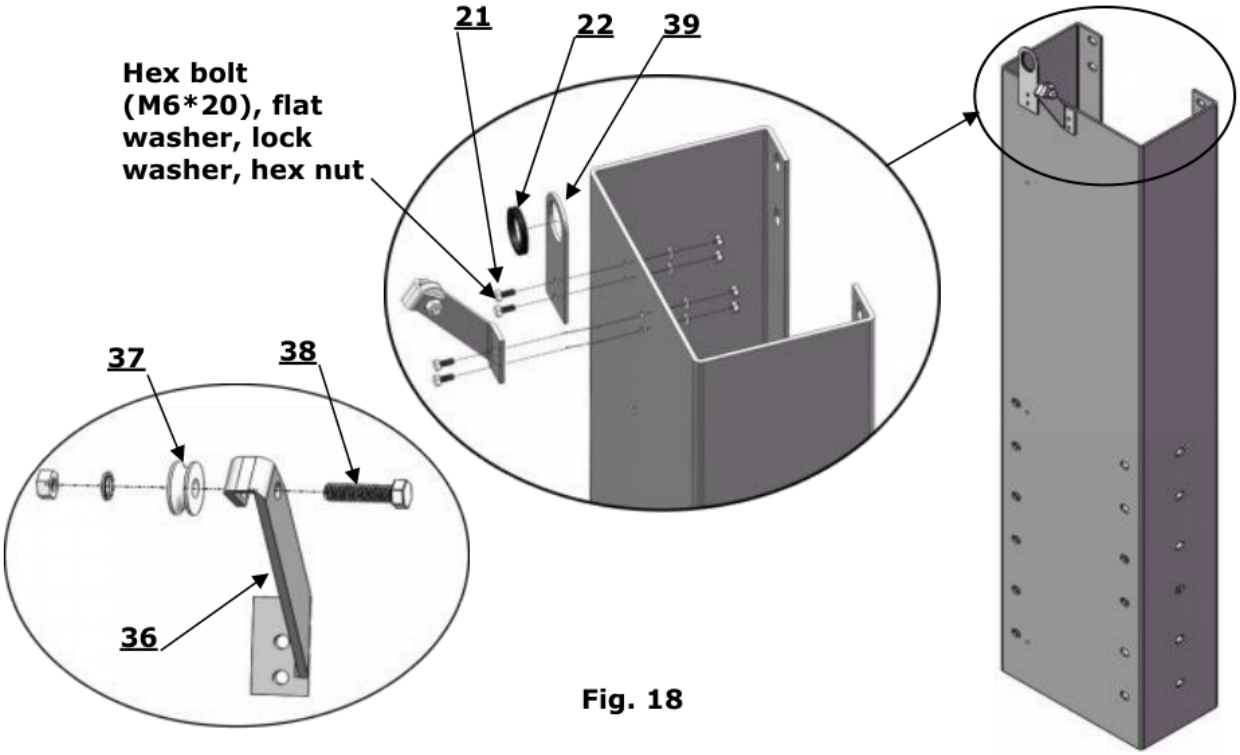

Fig. 18

Step E: Install the Hydraulic Cylinders

Lay the columns on the installation floor in the orientation shown in Figure 19. Select the power-side column location to suit the site; the factory generally recommends the right side when viewed in the vehicle drive-in direction.

Install each hydraulic cylinder as shown. Pass the cylinder fitting downward through its opening, then fit the specified retaining hardware.

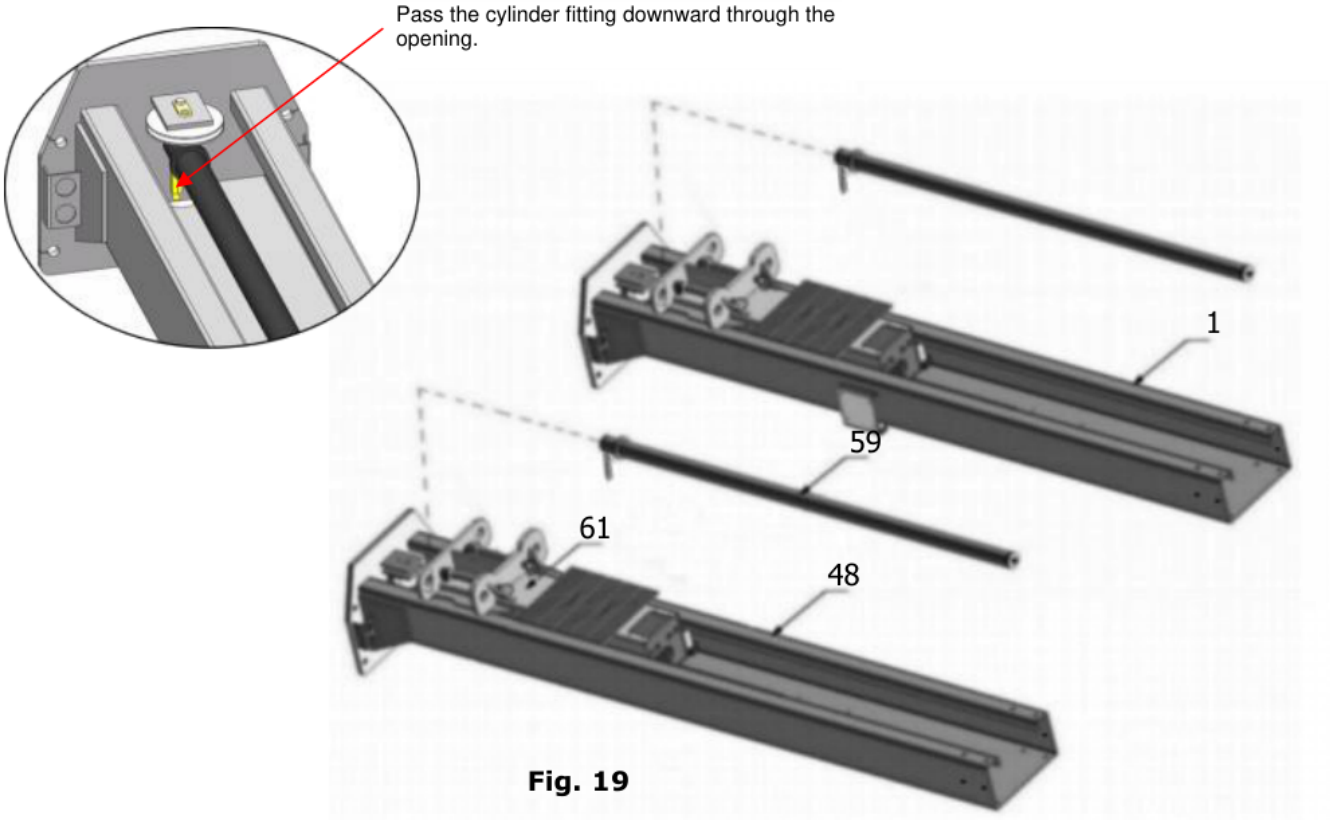

Fig. 19

Step F: Select the Column Height

Select the column setting to suit the available ceiling clearance. Low setting: 14 ft 6 in. overall height. Medium setting: 15 ft 6 in. High setting: 16 ft 6 in. Allow clearance above the complete installed lift.

High setting: connect the lower holes in the outer columns to the inner columns (Figure 20). Medium setting: use the middle connection holes (Figure 21). Low setting: use the upper connection holes (Figure 22).

Use the specified M12*35 bolts, two flat washers, lock washer, and nut at each connection. Match the cable and hose routing to the chosen height setting.

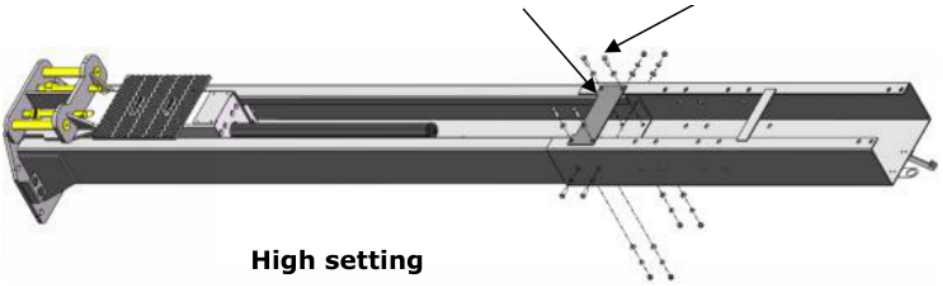

High setting

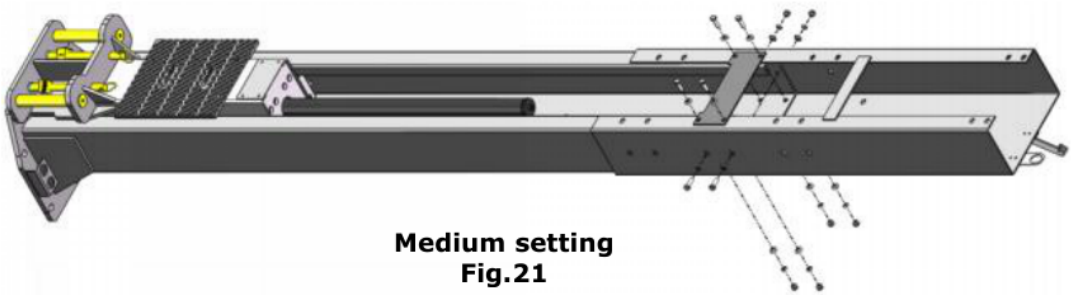

Medium setting
Fig.21

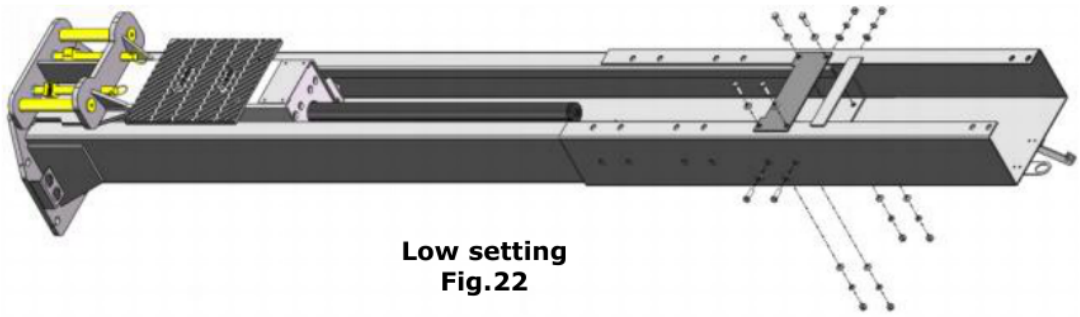

Low setting
Fig.22

Step G: Install Column Anchors

Position both columns on the marked layout. Check each column for plumb with a level and fit the supplied shims as needed. Install the anchors but leave them loose until the overhead beam is assembled.

Use a minimum anchor embedment of 4-3/8 in. Drill the holes, clean them thoroughly, and install the anchors as shown in Figure 23. Verify the 123-1/2 in. width between columns.

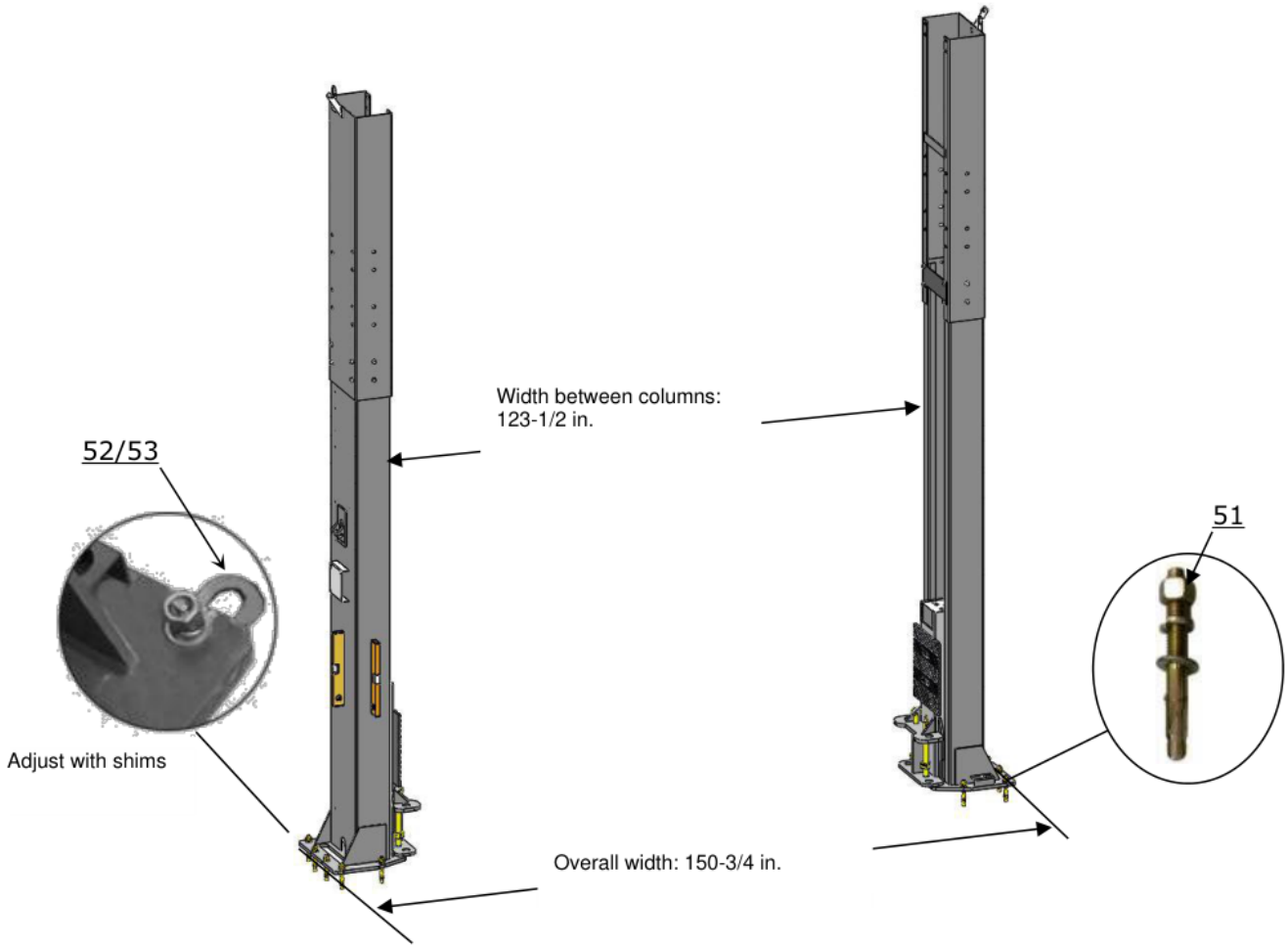

Fig.23

Note: Minimum embedment of Anchors is 4 3/8".



Step H: Install the Overhead Beam

Use suitable lifting equipment to position the power-side overhead beam. Hang its hook on the outer column, align the mounting holes, and install the specified connection bolts (Figure 24). Leave the bolts loose at this stage.

The overhead limit switch must be on the power-side column. Use the M12*35 bolts with two flat washers, lock washers, and nuts in the illustrated positions.

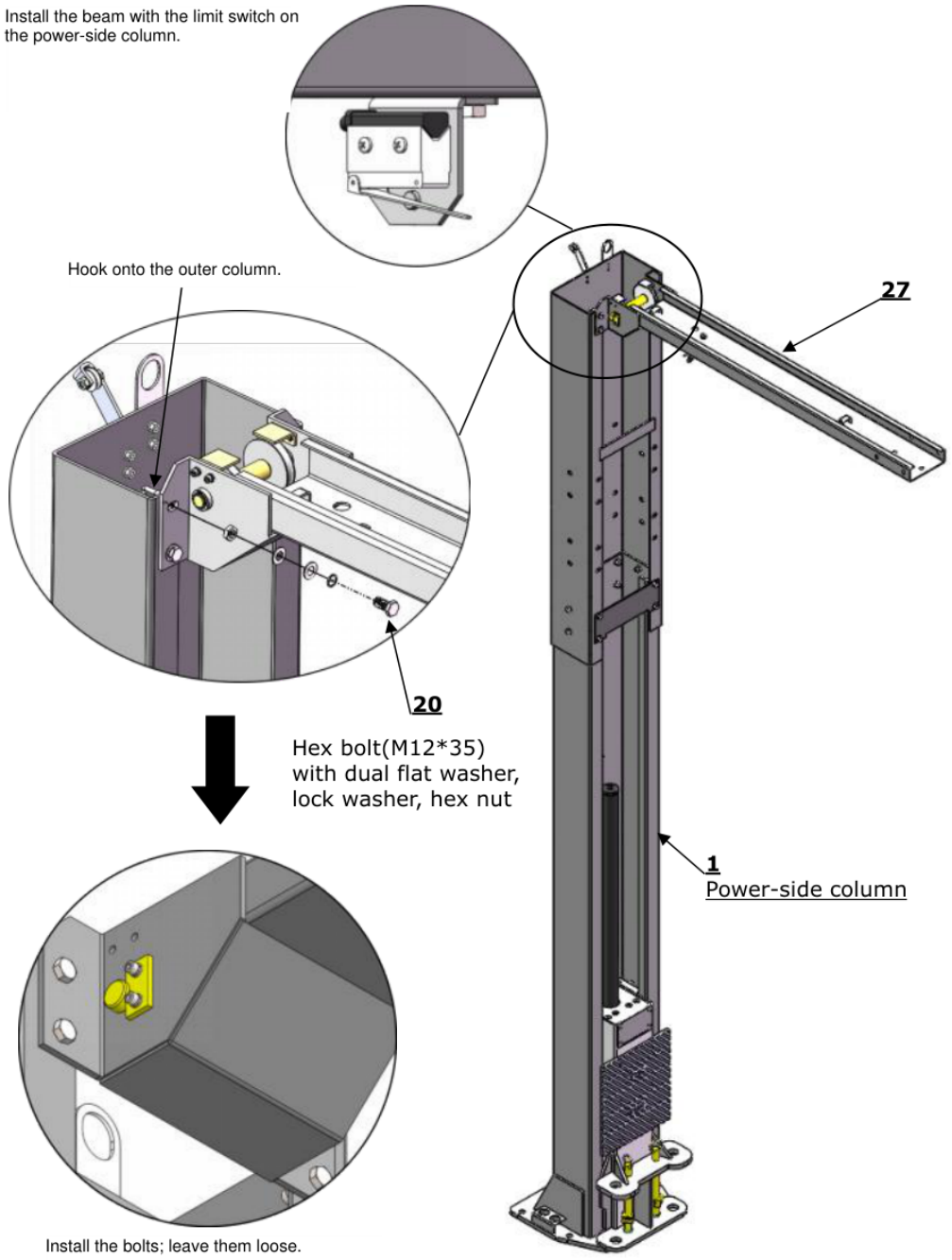

Step H: Secure the Beam and Anchors

Hang the offside beam on the offside column, connect the two beam sections, and tighten every beam fastener. Recheck that both columns are plumb.

Tighten the anchor bolts to 111 ft-lb with a ratchet and the correct socket (Figure 25). If any anchor will not hold the required torque, stop installation and correct the anchor or foundation before using the lift.

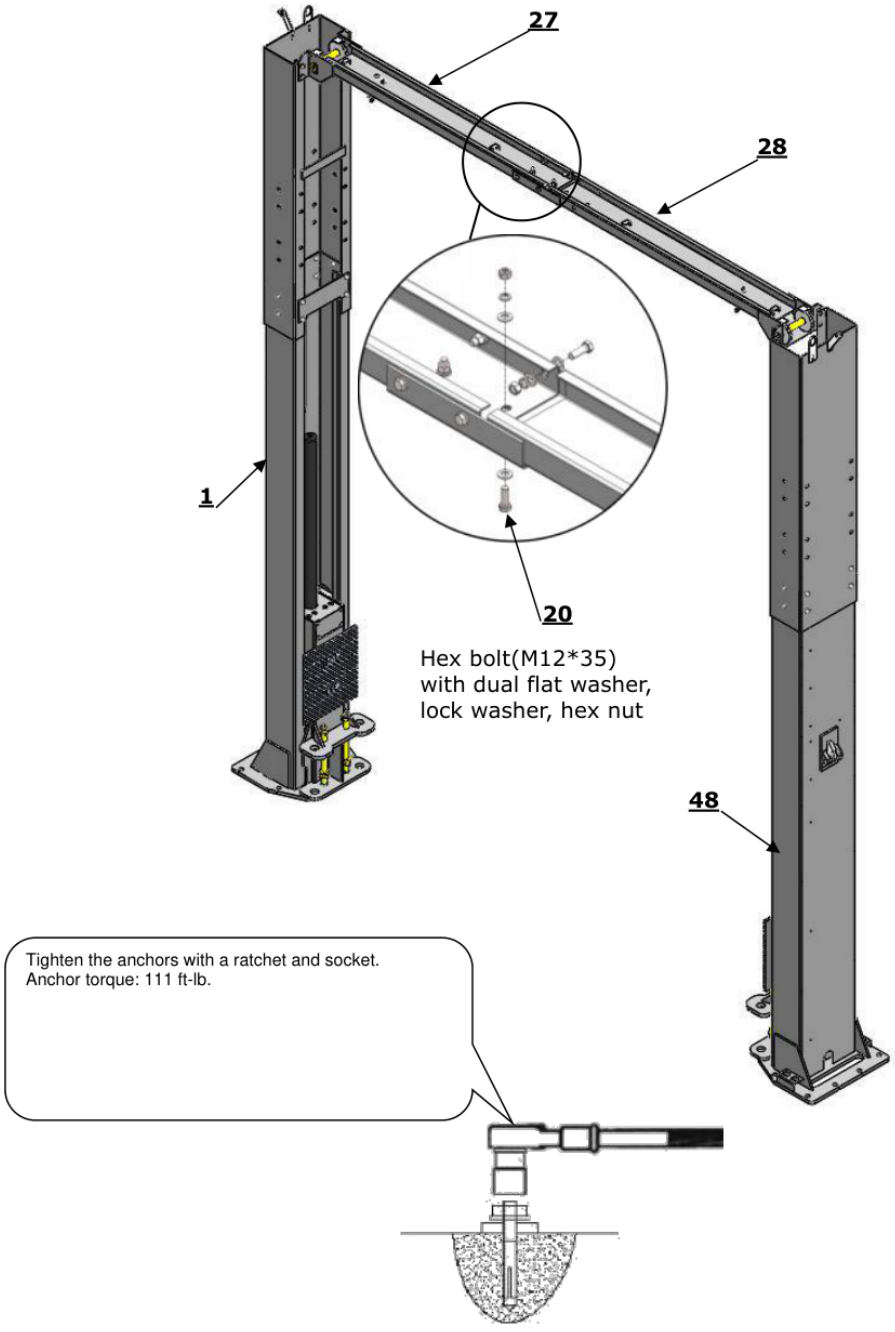

Fig.25

Step I-J: Shut-Off Bar and Safety Handle

Install the control bar and its brackets on the overhead beam (Figure 26). Loosen the bracket screws slightly, adjust the spacing until the bar moves freely, then tighten the screws.

Install the safety-release handle on the power-side safety device as shown in Figure 27. Confirm that the handle operates freely. Keep the electrical supply disconnected during installation.

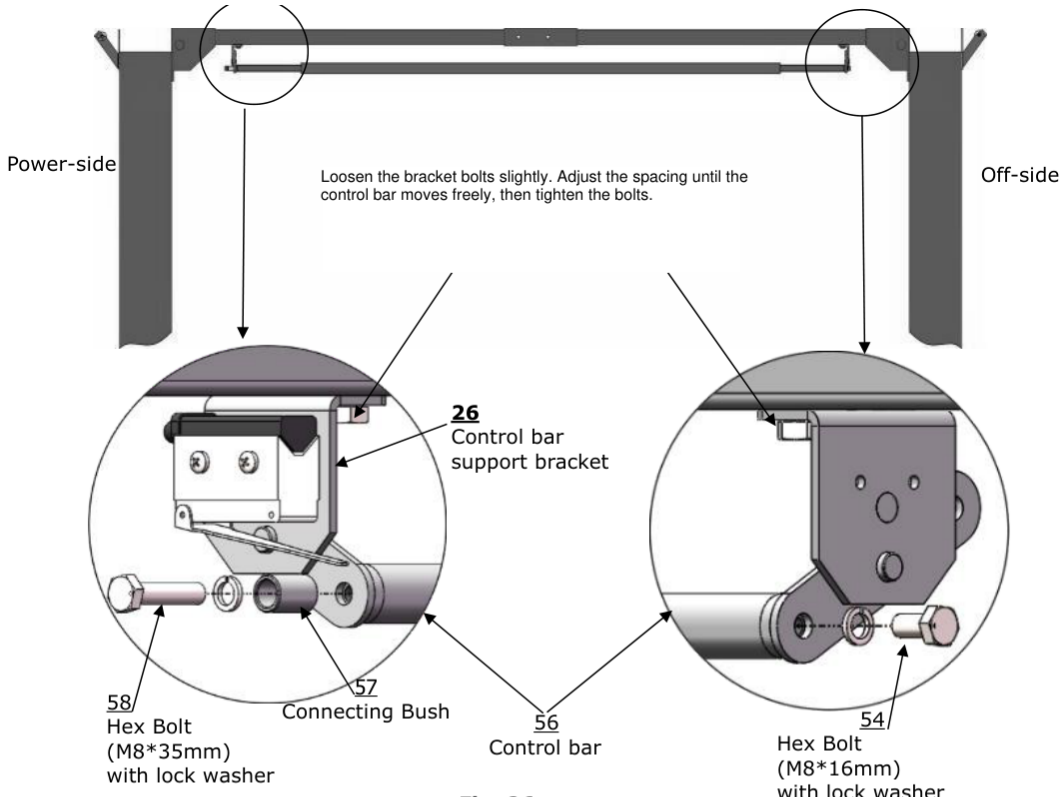

Fig. 26

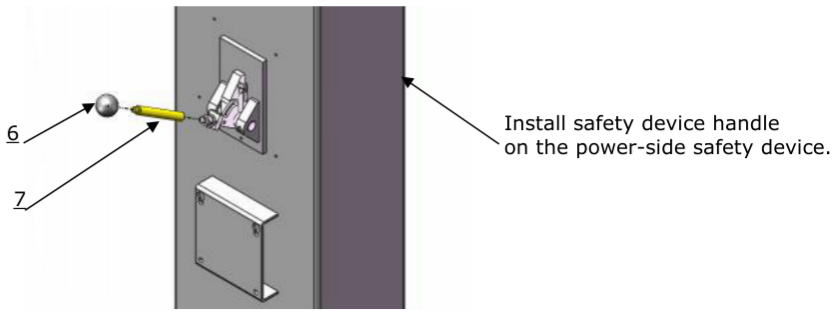

Fig. 27

Step K: Connect the Equalizer Cables

Raise both carriages by hand and engage their safety locks at the same height. Remove the plastic carriage covers to access the cable connections.

For the high setting, feed the equalizer cables through the carriage bottoms and out through the carriage openings. Install and tighten both cable nuts as shown in Figure 28.

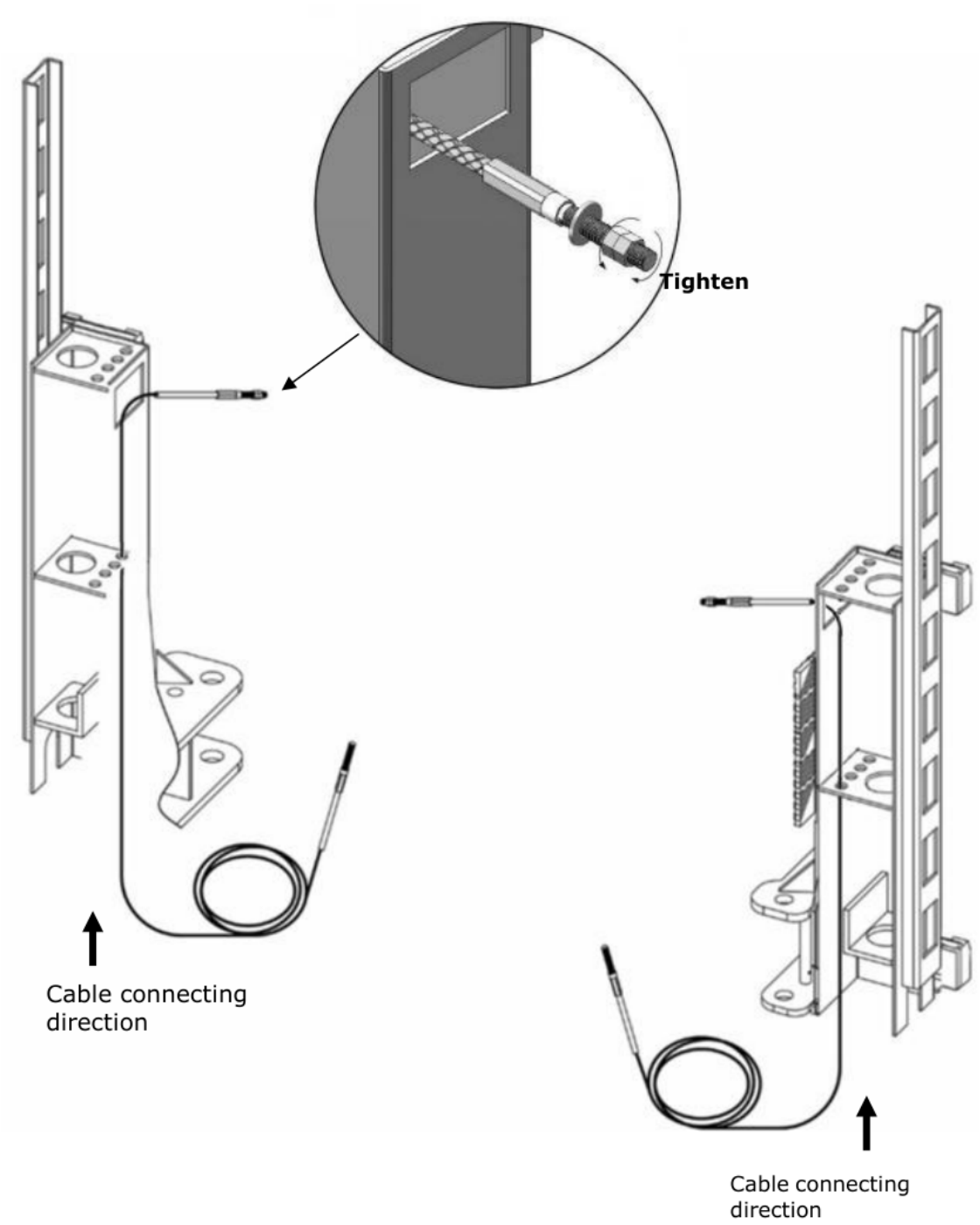

Step K: High-Setting Cable Routing

Route Cable 1 and Cable 2 exactly as shown in Figure 29 for the high column setting. Keep each cable seated in every pulley groove and follow its designated path through the overhead beam and columns.

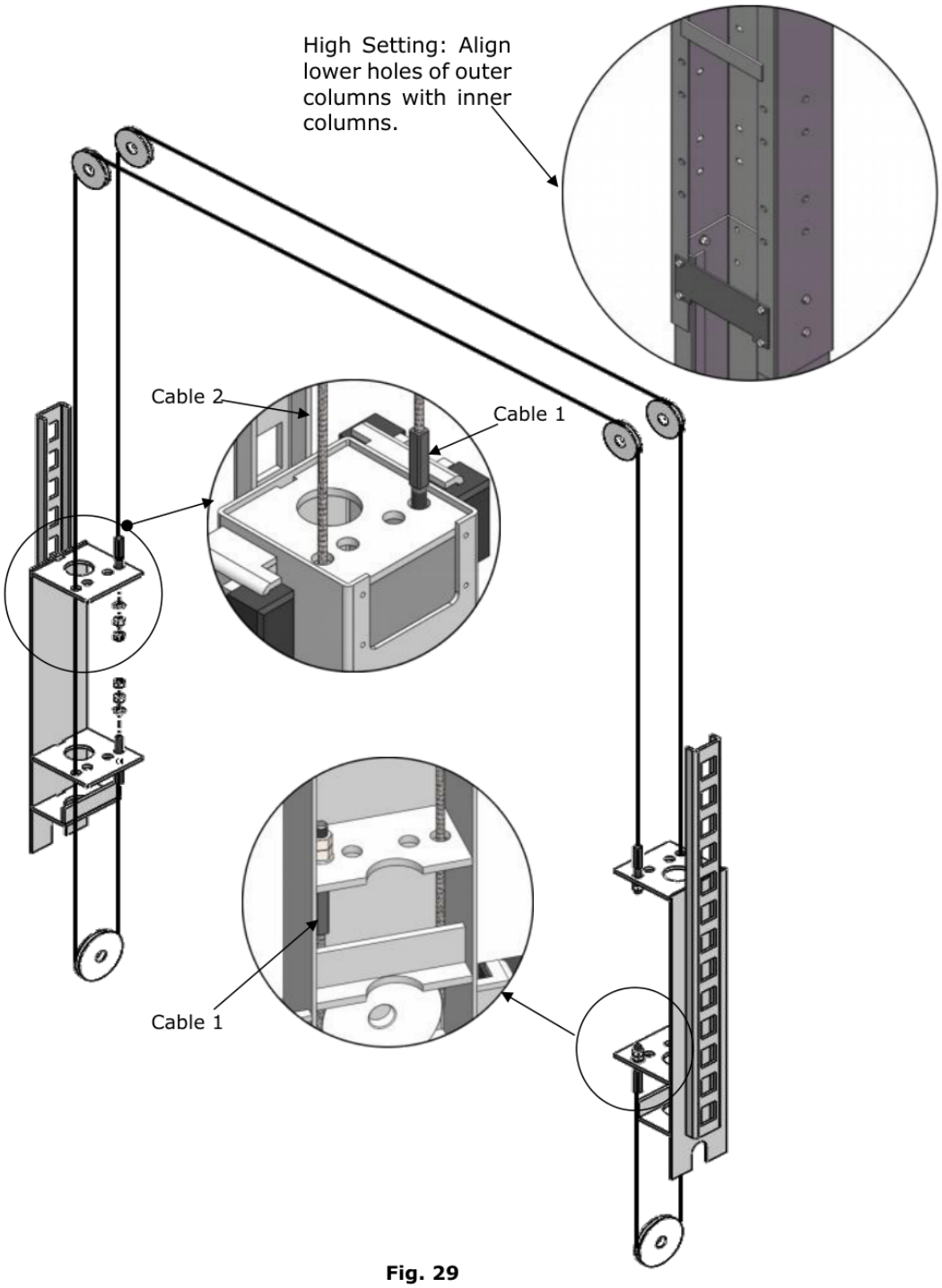

Fig. 29

Step K: Medium-Setting Cable Routing

For the medium column setting, follow the separate cable paths shown in Figure 30. Use the same equalizer-cable set and keep all routing and connection points in the illustrated positions.

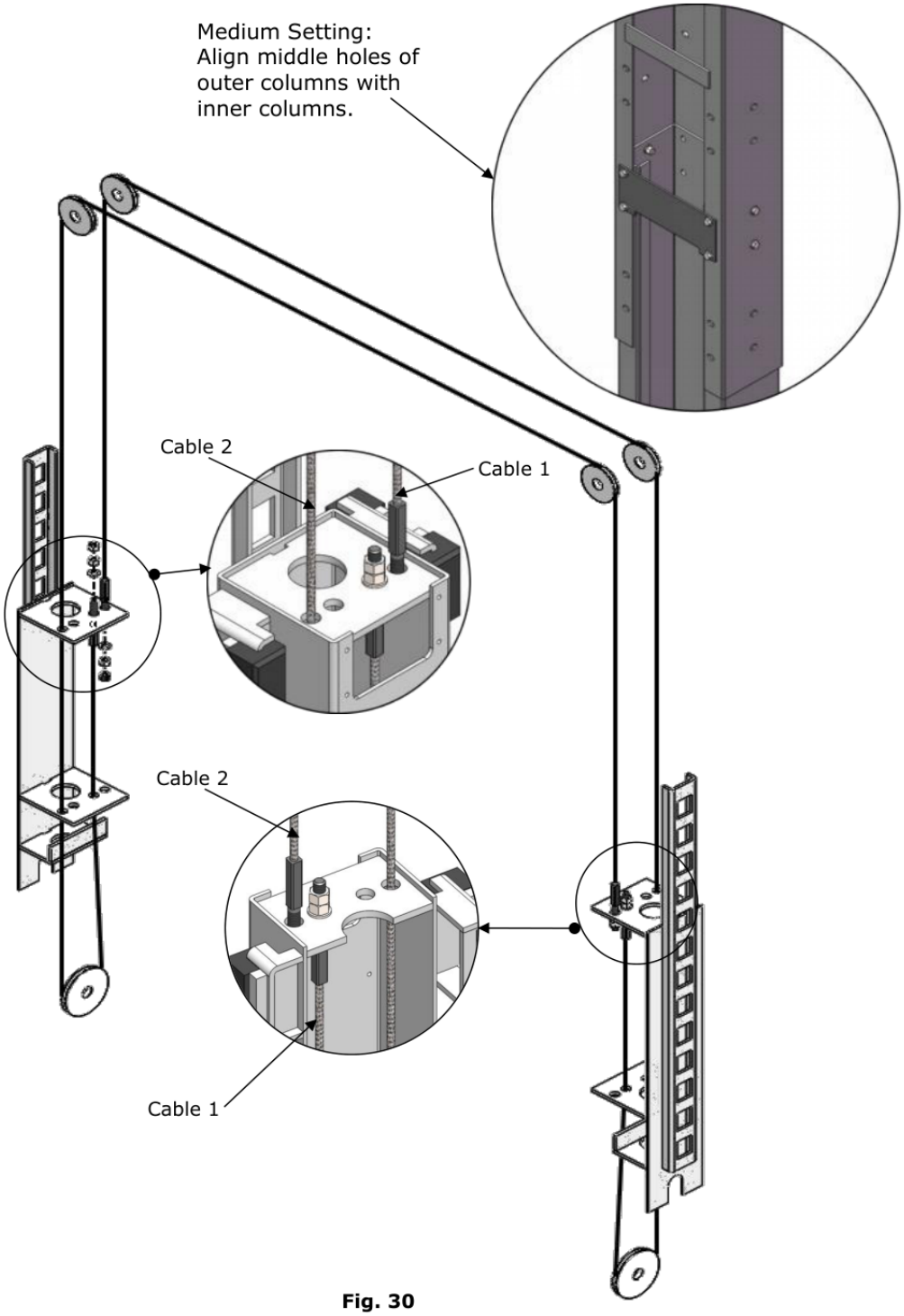

Fig. 30

Step K: Low-Setting Cable Routing

For the low column setting, route both equalizer cables as shown in Figure 31. Keep the cables along the inside of the columns and install the illustrated guides and hardware.

Check that neither cable is crossed incorrectly, twisted, trapped, or rubbing against other components. Final tension is adjusted during startup.

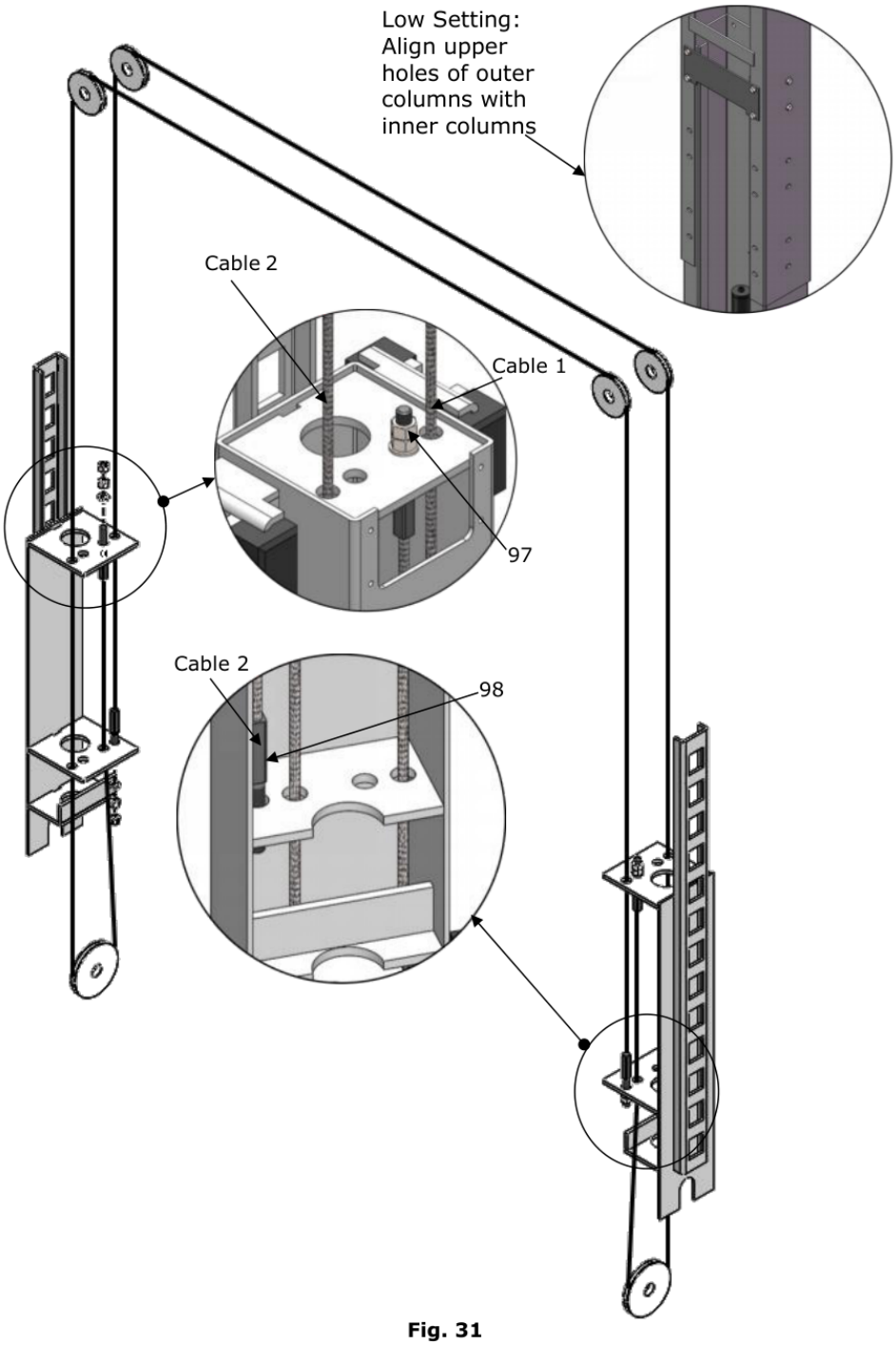

Fig. 31

Step L: Install the Power Unit

Mount the hydraulic power unit on the power-side column using the fasteners shown in Figure 32. Secure the unit before connecting its hoses or electrical supply.

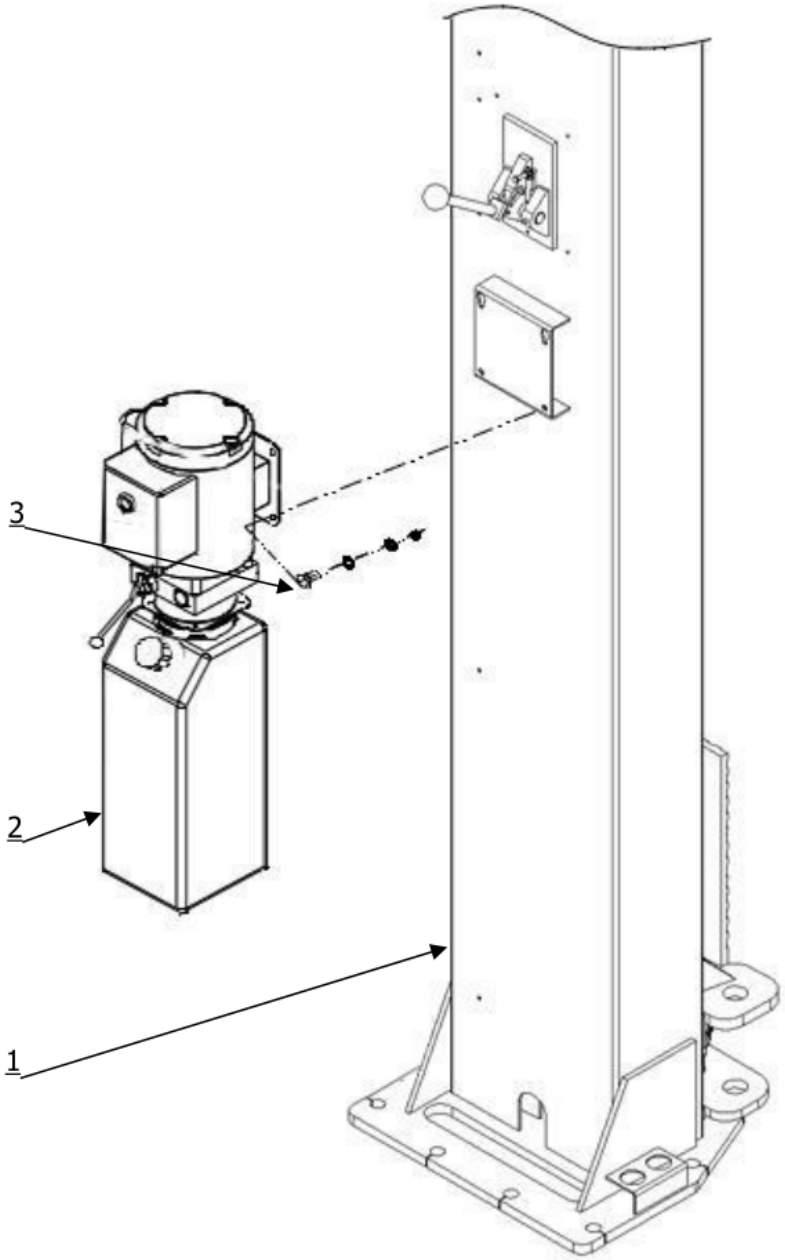

Fig.32

Step M: High-Setting Hydraulic Hoses

For the high column setting, route the hydraulic hoses as shown in Figure 33. Follow the designated connections to both cylinders and the power-unit fitting.

Route the hoses and electrical wires through their support brackets and the overhead retaining clamp.

Keep all hydraulic ports and fittings clean. Tighten the connections and ensure the hoses remain clear of moving parts.

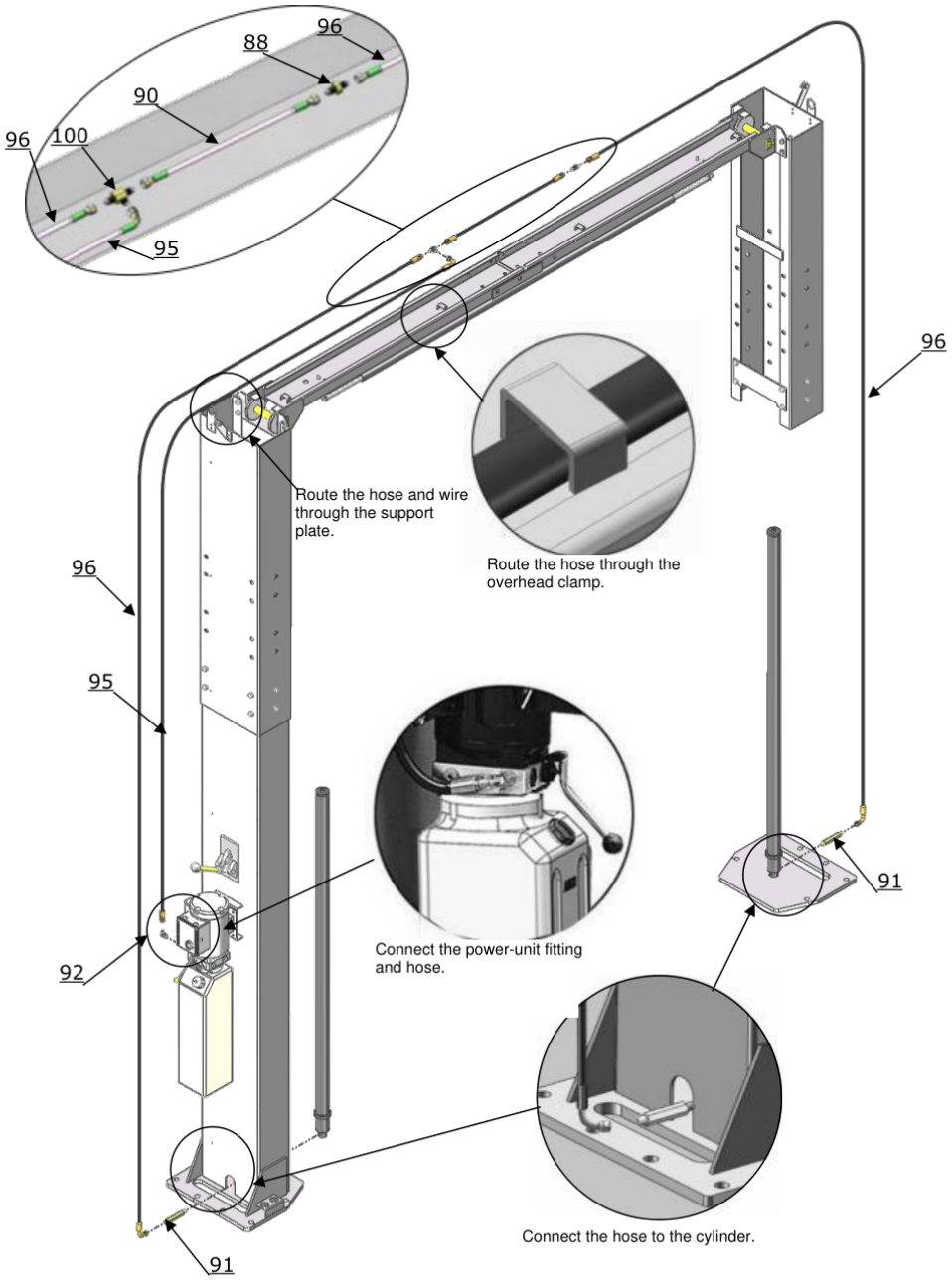

Fig.33

Step M: Medium and Low Hose Routing

Medium setting: connect and route the hoses as shown in Figure 34. Low setting: use the route shown in Figure 35.

Use the hose lengths, fittings, and part references assigned to the selected height setting. Tighten every connection and check that hoses cannot rub, kink, or become trapped during operation.

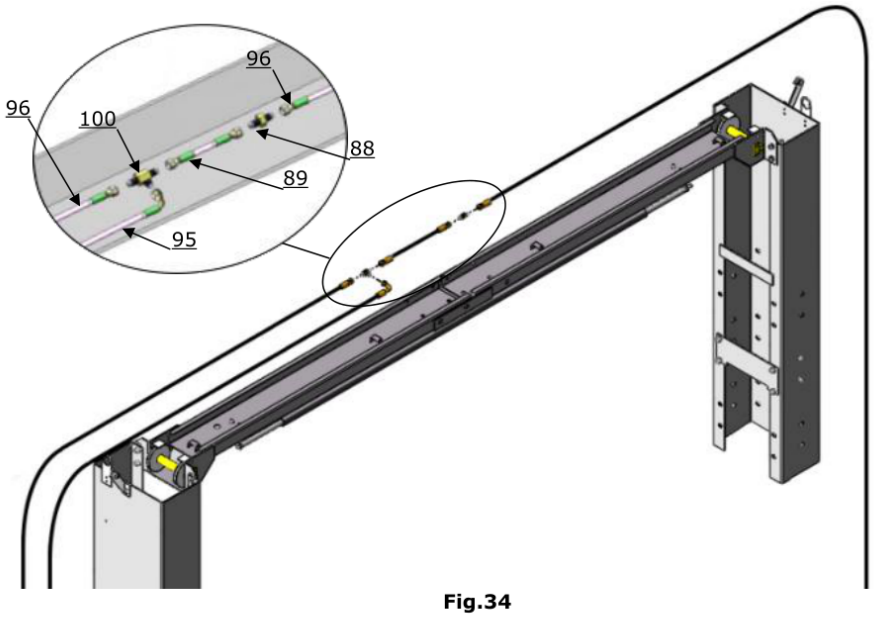

Fig.34

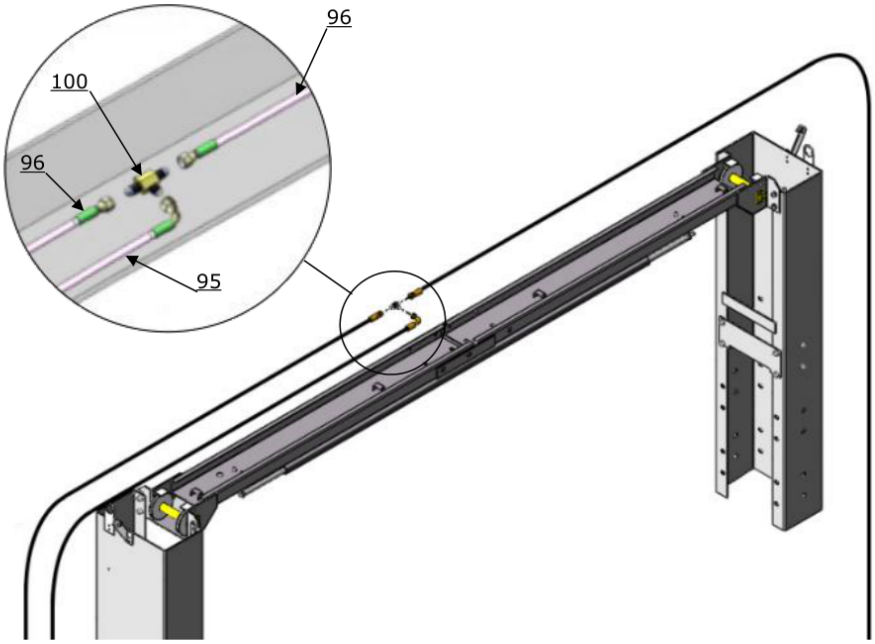

Fig.35

Step N: Protective Covers and Cable Guide

Install the protective covers and equalizer-cable limit bracket as shown in Figure 36. Partially tighten the M6*40 round-head bolt, position the cover, then tighten the bolt.

Cover 86: install one per column for the low setting, two per column for the medium setting, and three per column for the high setting. Use the additional covers only in the height settings identified in the illustration.

Install cable-limit bracket 94 after routing the cable to help prevent it from coming loose. Use the specified M6*16 socket bolts, flat washers, and lock washers.

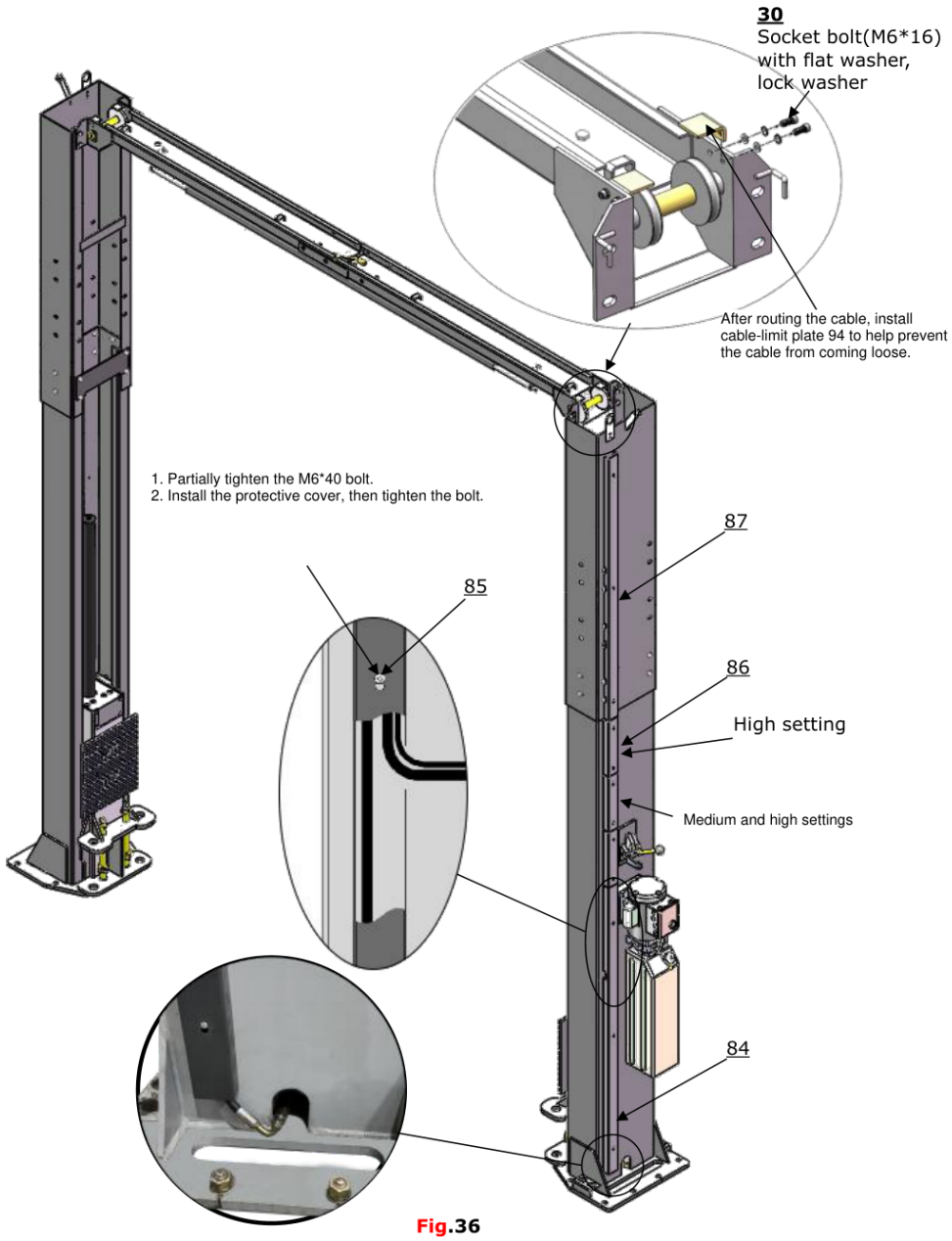

Fig.36

Step O: Safety-Release Cable

Begin at the offside safety device. Pass the safety-release cable through the small pulley bracket and overhead beam, then connect it to the power-side safety device (Figure 37).

Keep the cable outside the retaining clamp and separate from the hydraulic hose and limit-switch wire. Verify that both safety devices release together.

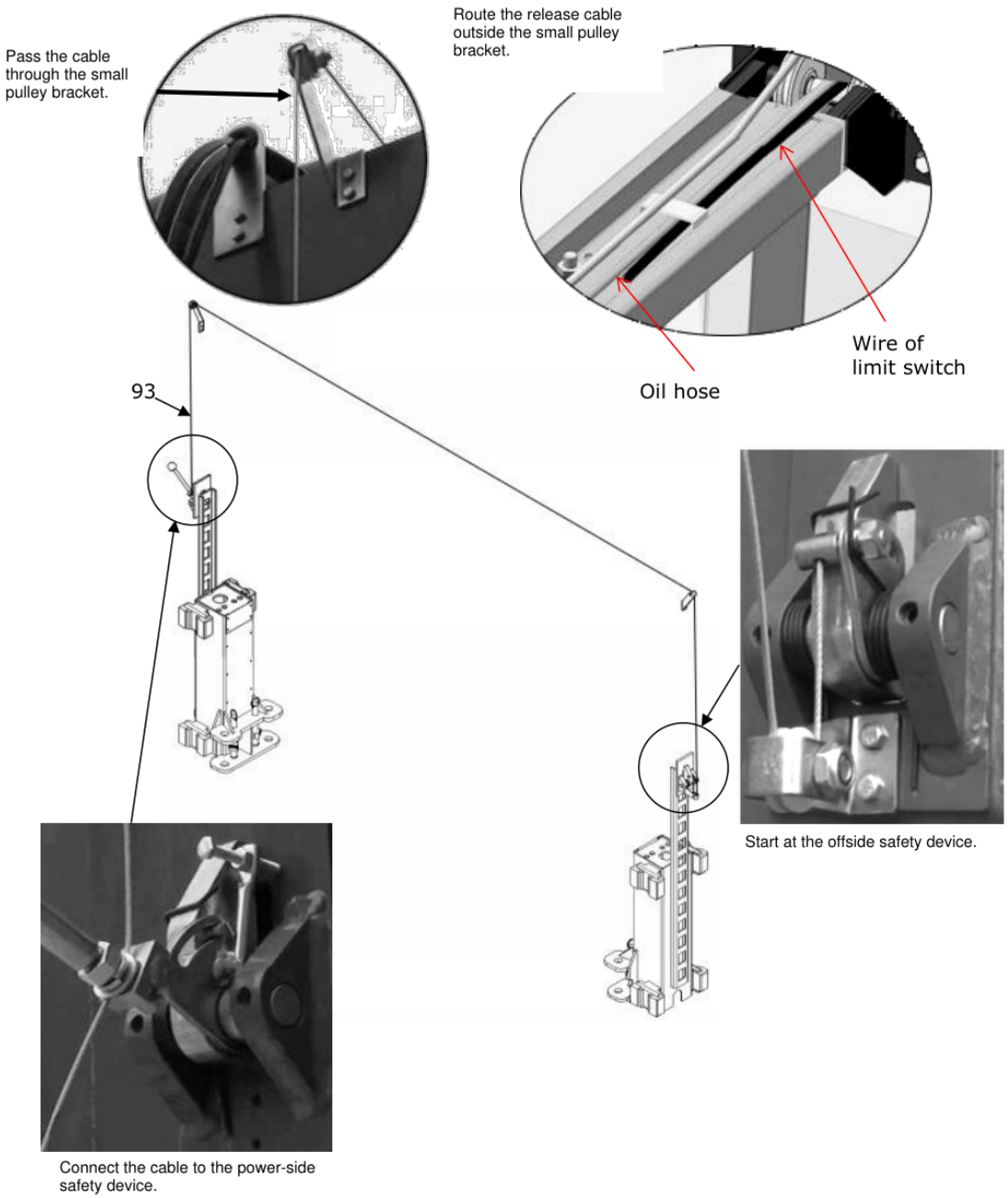

Fig.37

Step P: Install Safety Covers

Install the safety-device covers using the M6*8 round-head bolts and flat washers shown in Figure 38. Confirm that the covers do not interfere with the locks or release mechanism.

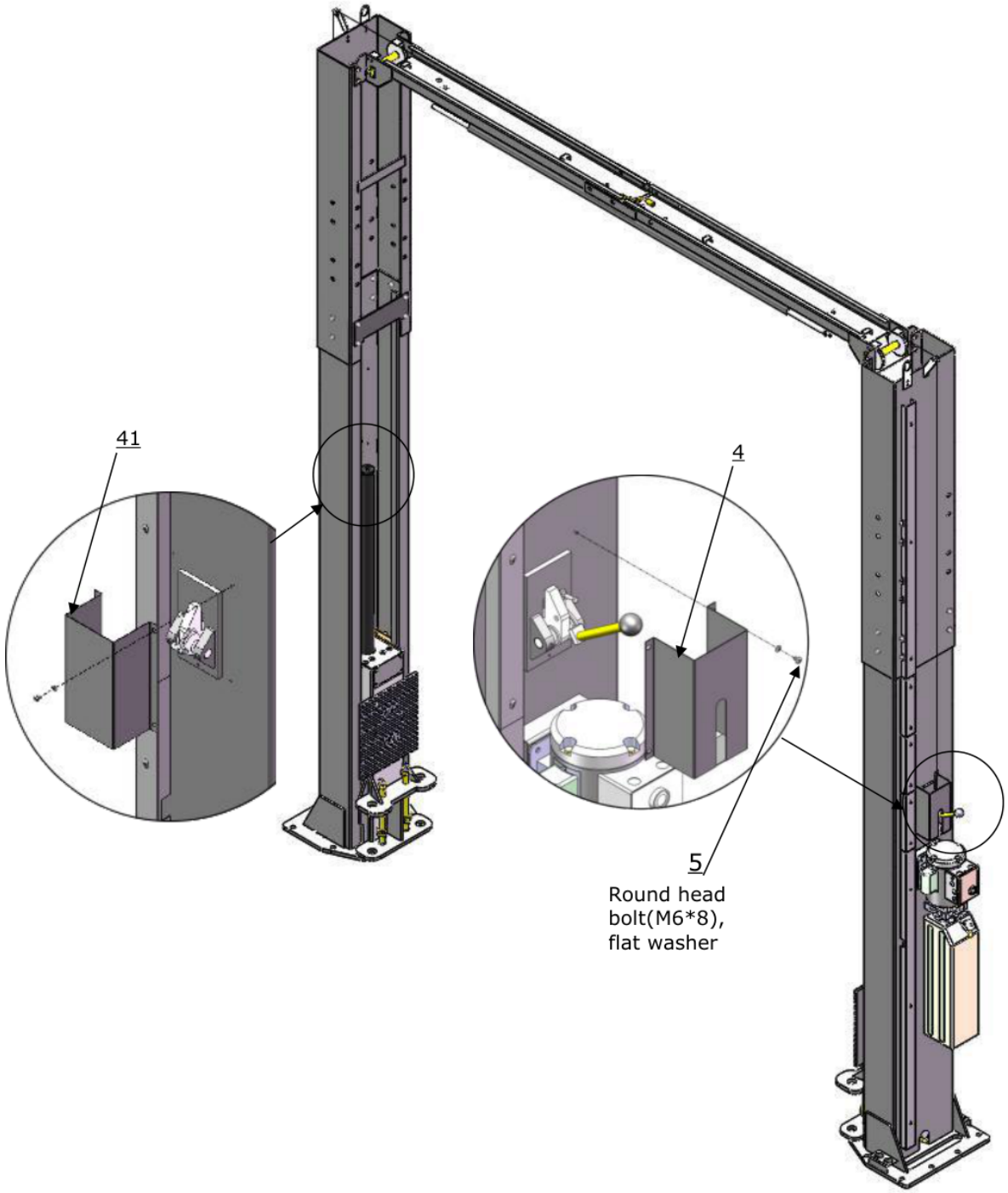

Fig.38

Step Q: Install and Adjust the Arms

Install the four arms, arm pins, springs, and toe guards in the positions shown in Figure 39. Lower both carriages fully before adjusting the arm restraints.

Use a 10 mm hex key to loosen the arm-lock socket bolts (Figure 40). Adjust the moon gear in the direction shown in Figure 41, fully engage the gear and arm-lock teeth, and tighten the bolts (Figure 42).

Inspect all four restraints before every use. Do not operate the lift if a restraint fails to engage or has damaged teeth. Replace damaged components with the correct replacement parts.

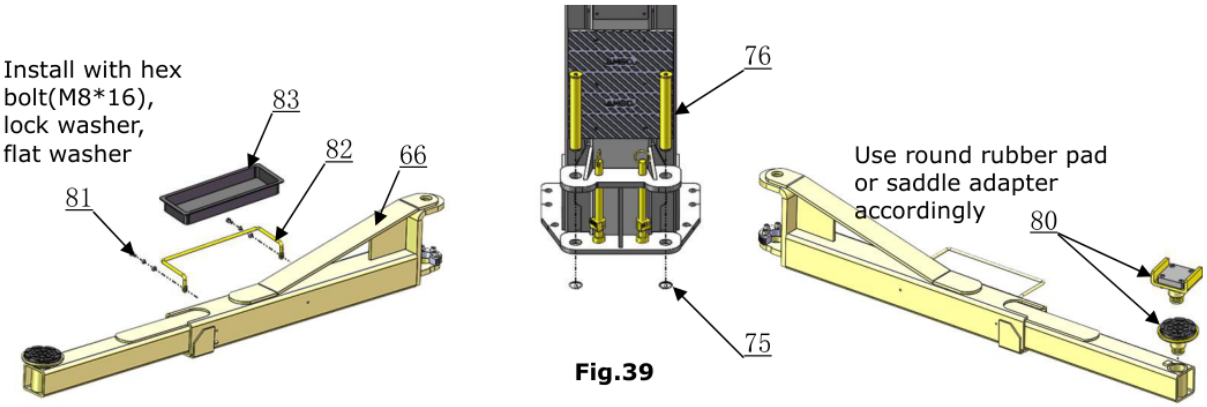

Fig.39

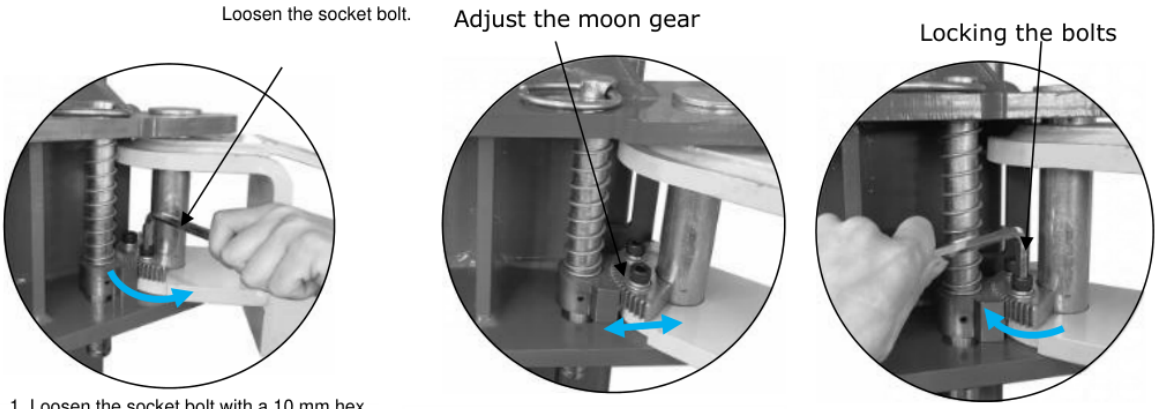

1. Loosen the socket bolt with a 10 mm hex key.

2. Adjust the moon gear in the direction shown.

3. Fully engage the gear and arm lock, then tighten the bolts.

Fig.41

Step R-S: Oil Fill and Electrical Supply

Tighten all hydraulic connections and fill the reservoir with clean ISO VG 46 anti-wear hydraulic oil. Keep dirt, moisture, and other contaminants out of the hydraulic system.

A qualified electrician must connect the 220V, single-phase supply according to the installed power-unit data plate. Connect the two supply conductors to contactor terminals L1 and L3 and connect the equipment grounding conductor to the designated ground connection.

The limit switch uses terminals C and NC, as shown in Figure 43. Keep the supply disconnected and secured while making electrical connections.

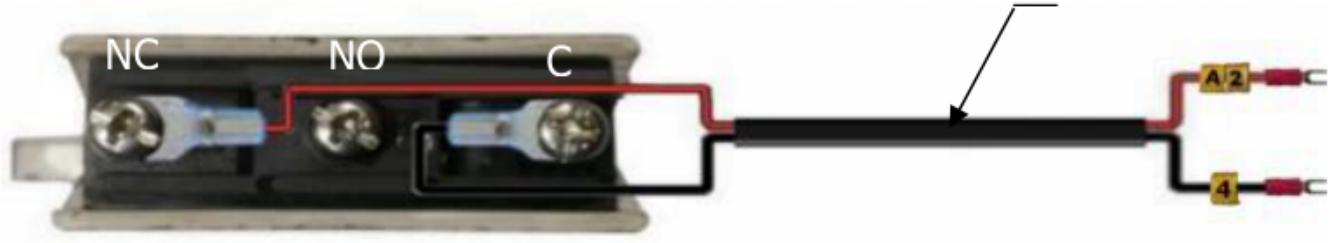

Electrical Connections

Figure 44 shows the single-phase motor and control circuit. Follow the terminal markings on the installed power unit.

Remove the jumper between control-button terminal 4 and contactor terminal A2 (Figure 45). Connect the black C-terminal wire from the limit switch to terminal 4 and the red NC-terminal wire to A2 (Figure 46).

Test the overhead shut-off bar after installation and confirm that contact stops upward travel. Do not use the lift if the switch fails this test or if electrical wires are damaged or badly worn. Disconnect and secure power before repair.

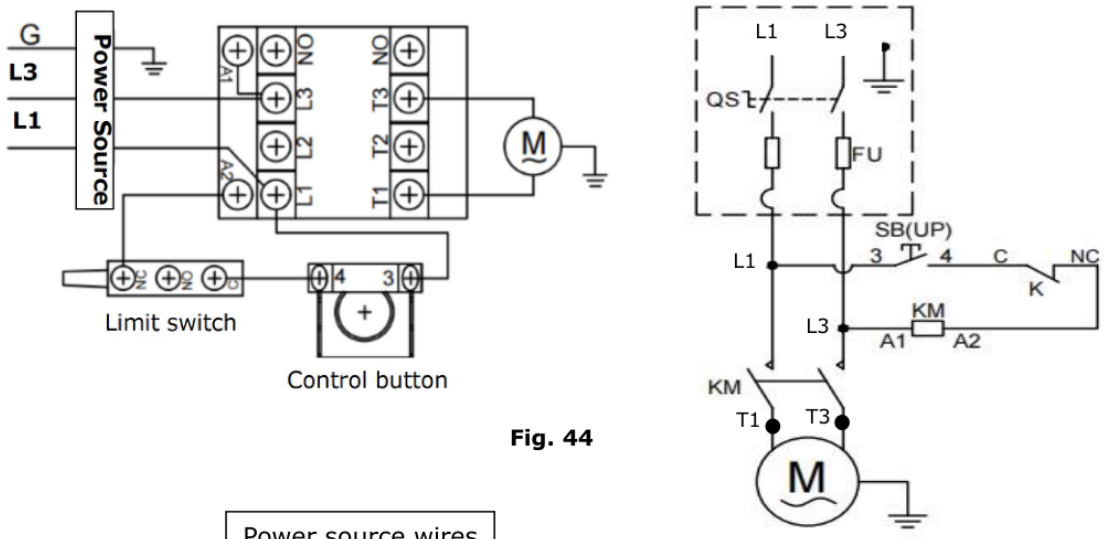

Fig. 44

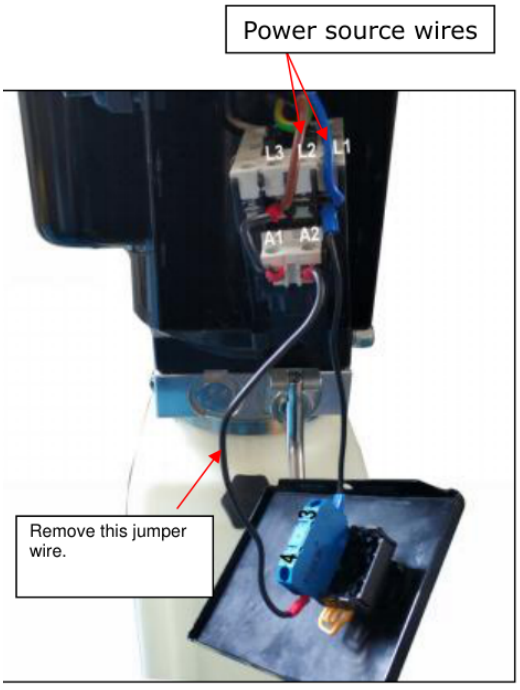

Fig. 45

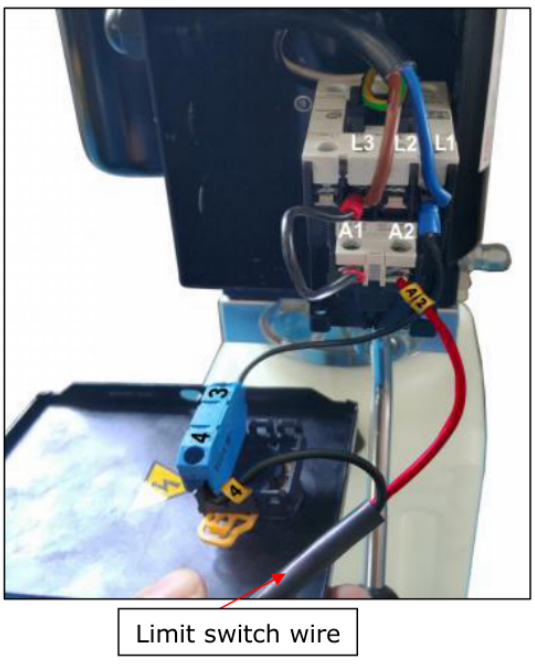

Fig. 46

Lift Assembly

IV. EXPLODED VIEW

Model QL15KCF

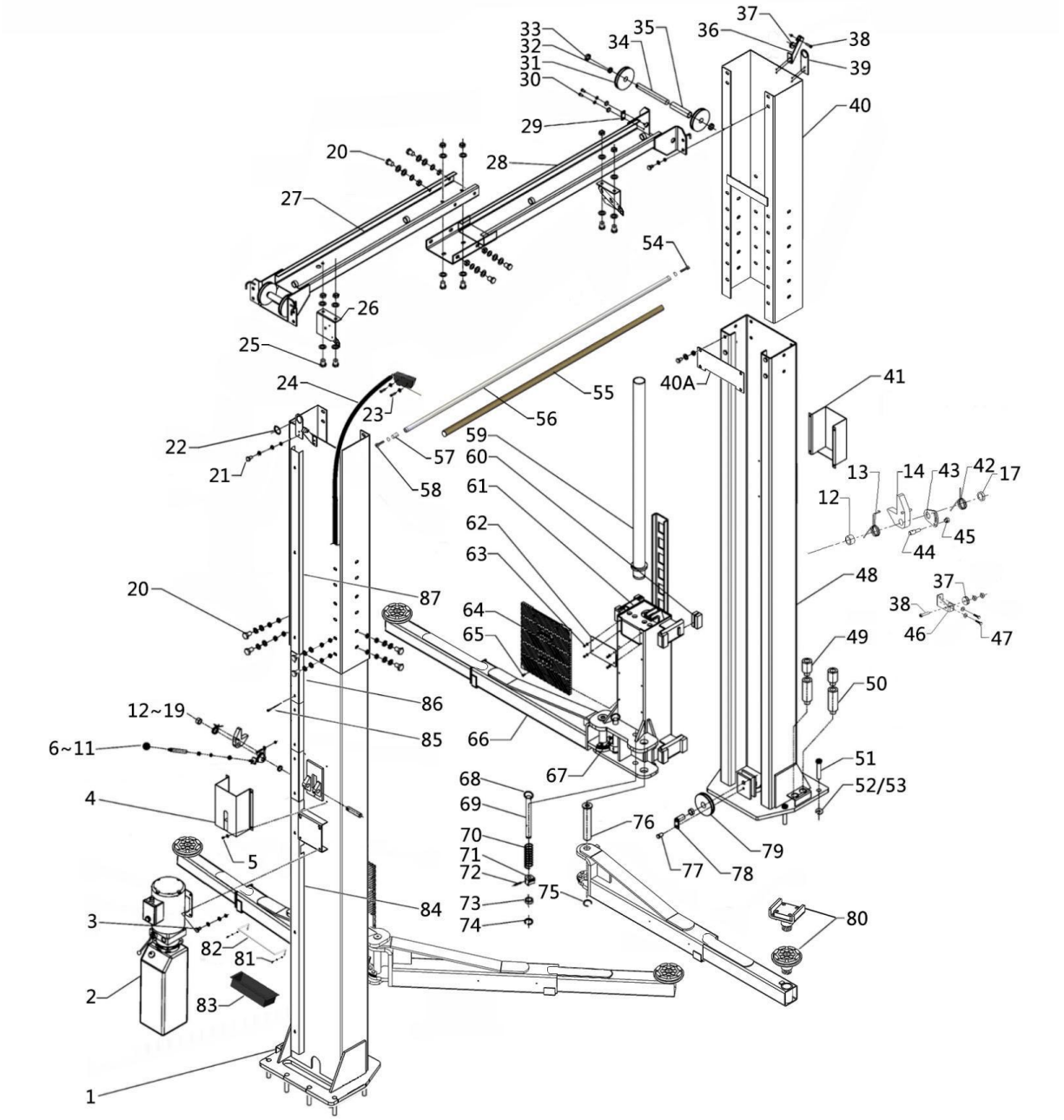

Fig. 47

Lift Parts: Items 1-38

PARTS LIST FOR MODEL QL15KCF

Item	Part No.	Description	Qty.
1	11217458-03	Power-side column	1
2	071102	Manual Power unit	1
3	1002735003	Hex bolt M8*25 (Include flat washer, lock washer, hex nut)	4
4	11217405	Power-side safety device cover	1
5	1002735004	Round head bolt M6*8 (Include flat washer)	8
6	10217005	Plastic ball M10	1
7	11217006	Safety Lock handle	1
8	10206023A	Hex Nut M12	1
9	10420026	Lock washer φ12	1
10	10206006	Flat washer φ12	1
11	11217004	Main Cam Lock	1
12	11217436	Large Spacer 1	2
13	10217030	Safety Spring	2
14	11217009	Main Lock	1
15	10217010	Hex bolt M6*40	1
16	10217011	Hex nut M6	9
17	11217012	Small Spacer	2
18	10217051	Socket Set Screw M10*10	2
19	11217050	Safety pin	2
20	1002735005	Hex bolt M12*35(Include 2 flat washer, lock washer, hex nut)	38
21	1002735006	Hex bolt M6*20 (Include flat washer, lock washer, hex nut)	8
22	1061K074	Protective ring	2
23	1002735007	Round head bolt M4*30 (Include hex nut)	2
24	1002185004	Limit switch assy.	1
25	1002735008	Hex bolt M10*20(Include flat washer, lock washer, hex nut)	4
26	1102022003A-01	Control Bar fixing bracket	2
27	11217016B-01	Top Beam(Left)	1
28	11217015B-01	Top Beam(Right)	1
29	11420044	Pin Limit Plate	2
30	1002735009	Socket bolt M6*16(Include flat washer, lock washer)	8
31	11217019-02	Top pulley	4
32	10217020	Bronze Bush for Pulley	6
33	11217021	Top Pulley Spacer	4
34	11217022	Pin for Top Pulley	2
35	11217023	Top Pulley Spacer	2
36	11217379	Lock release cable bracket	2
37	10206009	Plastic Small Pulley P005A-2	3
38	1002735010	Hex bolt M10*35(Include lock washer, hex nut)	3

Lift Parts: Items 39-78

Item	Part No.	Description	Qty.
39	11217024	Oil hose supporter	2
40	11217470-02	Outer column	2
40A	11217068	Column Reinforce Plate	2
41	11217406	Offside safety device cover	1
42	10217008	Safety Spring	1
43	11217031	Offside Cam Lock	1
44	10217032	Cable connecting pin	1
45	11217033	Nylok Nut	1
46	11217029	Pulley bracket	1
47	1002735011	Hex bolt M6*15 (Include flat washer)	2
48	11217459-03	Off-side column	1
49	1102214016A-01	3” Stackable adapter	4
50	1102504001-01	6” Stackable adapter	4
51	10201140	Anchor Bolt 3/4*6 1/2”	12
52	10201090	Shim(1mm)	10
53	10620065	Shim(2mm)	10
54	1002735014	Hex bolt M8*16(Include lock washer)	1
55	10206025A	Control Bar Foam Pipe	1
56	1102022001A-01	Control Bar	1
57	1102022007	Connecting Sleeve	1
58	1002735013	Hex bolt M8*35 (Include lock washer)	1
59	C804209	Cylinder	2
60	1002755015	Slide Block	16
61	11217480-02	Carriage	2
62	11217054	Carriage Plastic Cover	2
63	10209009	Round Head Screw M6*8	8
64	10217053	Protective Rubber	2
65	10209019	Flat head screw M6*16	12
66	10217165-03	Lifting Arm assy.	4
67	11217046C	Arm Lock bar (Right)	2
68	10209153	Pull ring of arm lock bar	4
69	11217046B	Arm Lock bar (Left)	2
70	10217045A-01	Spring	4
71	1002163001	Arm Lock	4
72	10206036-01	Cotter Pin	4
73	1102163002	Washer	4
74	10610008	Clip Ring φ30	4
75	10520023	Clip Ring φ38	4
76	11217047B	Pin for Lifting arm	4
77	1002205001	Hex Bolt M10*15(Include flat washer, lock washer)	2
78	11217037	Bottom pin	2

Lift Parts and Arm Assembly

Item	Part No.	Description	Qty.
79	11217036-02	Bottom pulley	2
80	1102214015C	Single screw rubber pad assy.	4
	21108	Single screw saddle adapter assy.	4
81	100273012	Hex bolt M8*16/(Include flat washer, lock washer)	4
82	11206154	Rear toe guard	2
83	10206156	Tool tray	2
84	11203778-01	Wire Protective cover L=61 13/32"	2
85	10206079	Cup Head Bolt M6*40	24
86	1102781001	Wire Protective cover L=11 31/32"	6
87	10217478-01	Wire Protective cover L=87 13/16"	2
88	10620079	Straight Fitting 1/4JIC*1/4JIC(Medium & High setting)	1
89	1002785006	Oil hose L=23 5/8"(Medium setting)	1
90	1002185001-01	Oil hose L=47 15/16"(High setting)	1
91	1102186001	Extended straight fitting	2
92	10209060	90° Fitting for power unit	1
93	10217453	Lock release cable L=408 9/32"	1
94	1102075001	Cable Limit Plate	4
95	10217456-02	Oil hose L=198 13/16"	1
96	10217455-01	Oil hose L=241 1/8"	2
97	10610096	Hex nut M18	8
98	10217452-01	Sync Cable L=494 1/2"	2
99	1004334003	Flat washer φ18	8
100	10211016	T-Fitting	1
101	10217501B	Parts box	1

4.1 Lifting Arm Exploded View (10217165-03)

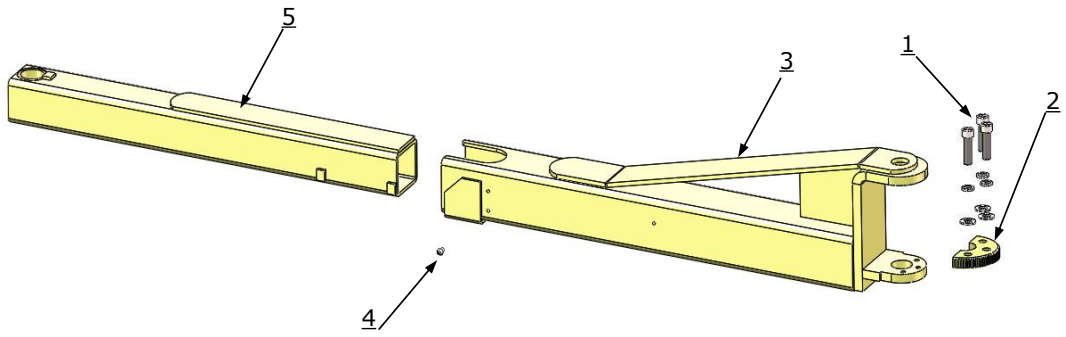

Fig. 48

Arm, Rubber Pad, and Saddle Parts

Item	Part No.	Description	Qty.
1	1102205004	Socket bolt (M12*48), flat washer, lock washer	12
2	1102163001	Moon gear	4
3	11217122-02	Outer arm	4
4	10201149	Flat head screw M8*12	4
5	11217166-03	Inner arm	4

4.2 Single Screw Rubber Pad Assy. Exploded View（1102214015C）:

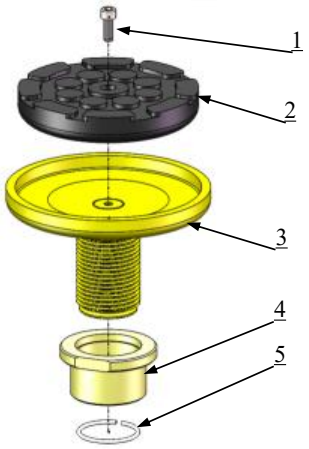

Item	Part No.	Description	Qty.
1	10420138	Socket Bolt M6*16	4
2	10209134	Rubber Pad	4
3	1102214015	Support frame	4
4	1101043004	Adjusting sleeve	4
5	10203042	Snap ring	4

Fig. 49

4.3 Saddle Adapter Exploded View（21108）:

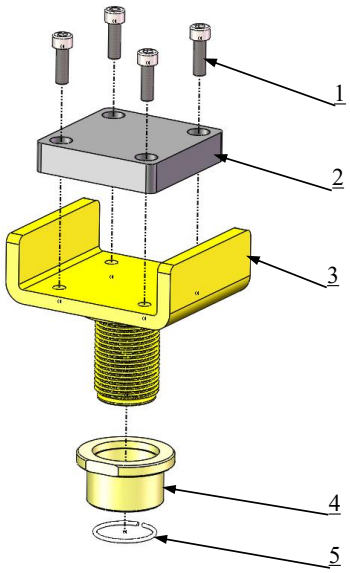

Item	Part No.	Description	Qty.
1	10420061	Socket Bolt M8*15	16
2	1102194001	Rubber Pad	4
3	1102185006A	Saddle support frame	4
4	1101043004	Adjusting sleeve	4
5	10203042	Snap ring	4

Fig. 50

Hydraulic Cylinder Assembly

4.4 Cylinders Exploded View C804209：（Old code 10217056B-02）

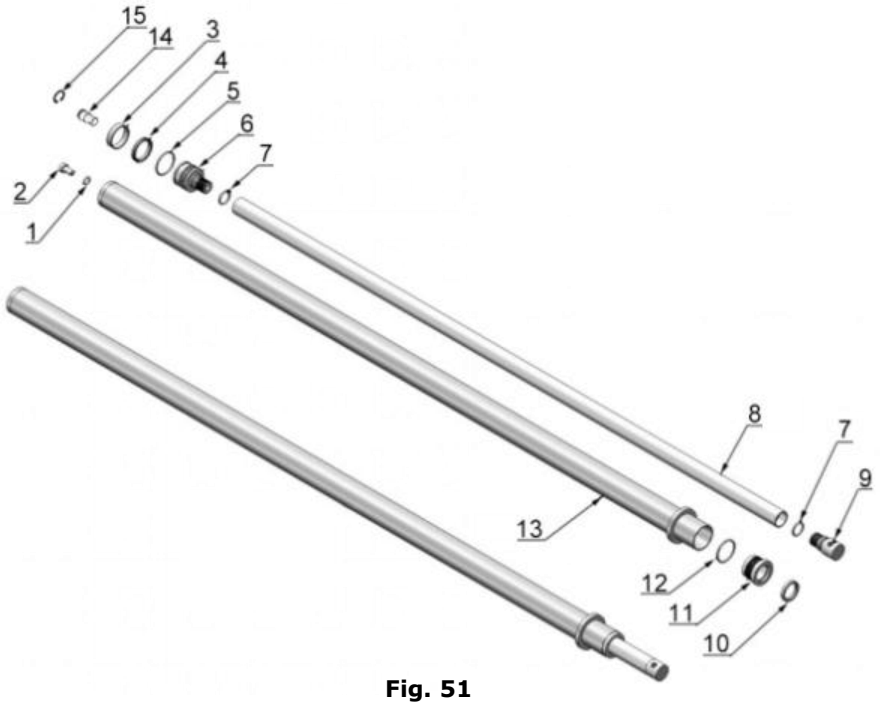

Fig. 51

Item	Part No.	Description	Qty.
1	10209069	O-Ring	2
2	10209231	Bleeding Plug	2
3	10201029	Support Ring	2
4	10201030-01	Y-Ring	2
5	10201031	O-Ring	2
6	11217074A	Piston	2
7	10217075	O-Ring	2
8	11217089	Piston rod	2
9	11217077	Piston rod fitting	2
10	10217078	Dust ring	2
11	11217079	Head cap	2
12	10217080	O-Ring	2
13	11217091	Bore weldment	2
14	C802004	Flow compensated restrictor	2
15	1002576003	Support ring	2

Hydraulic Power-Unit Reference

Figure 52 identifies the hydraulic return and outlet ports, release valve and handle, check valve, relief valve, and throttle valve. Use these references when connecting or servicing the power unit.

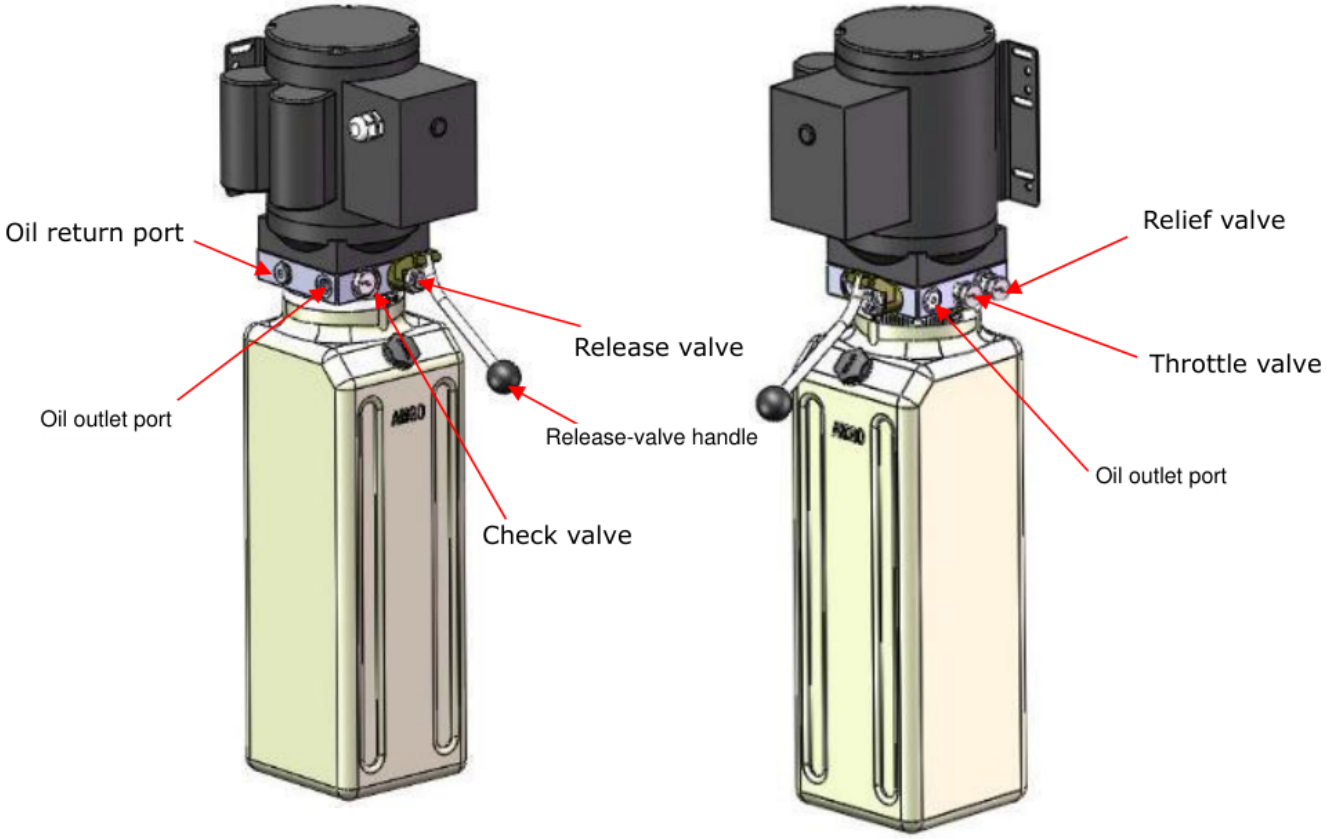

Fig. 52

Initial Adjustment and Air Bleeding

Equalizer cables: hold the cable fitting with an open-end wrench while tightening the cable nut until both cables have equal tension. If the carriages move unevenly, adjust the nut on the lower carriage until both sides travel together (Figure 53).

Safety-release cable: raise both carriages and engage the locks at the same height. Take up the cable slack, release a small amount of tension, and tighten the cable nuts. Verify that both devices lock and release correctly, then install their covers.

Bleed the cylinders: raise the carriages to approximately 3 ft 3-3/8 in. Loosen the bleed plug, allow trapped air to escape, and retighten it. Repeat if movement is not smooth (Figure 54).

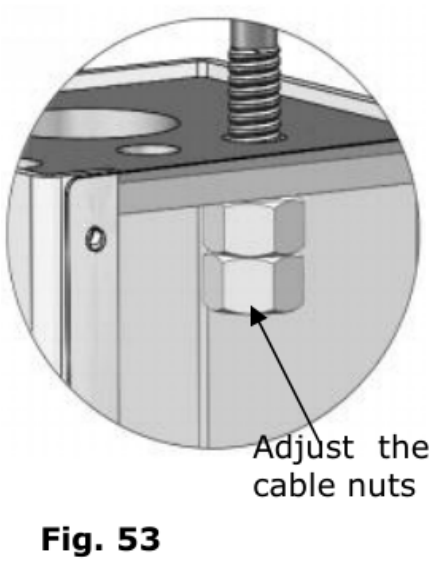

Fig. 53 - Equalizer-cable adjustment

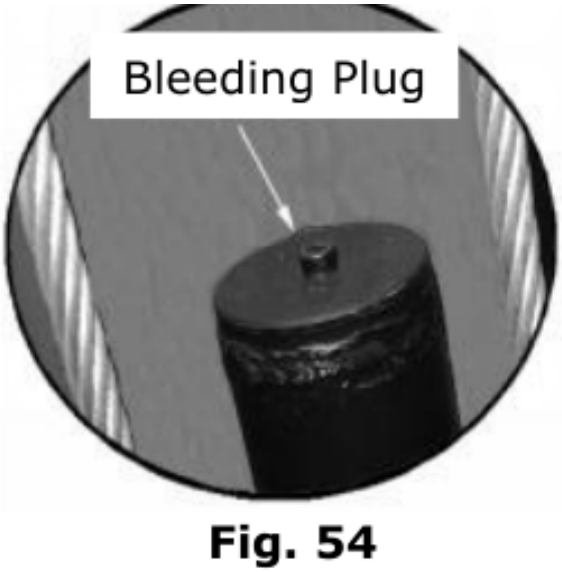

Fig. 54 - Cylinder bleed plug

Lowering Speed and Load Test

Turn the throttle valve clockwise to slow lowering or counterclockwise to increase lowering speed (Figure 55). Make adjustments carefully and check the result with controlled test cycles.

Test with a load within the 15,000 lb rated capacity. Keep the first few cycles close to the floor and verify that the carriages rise and lower together and both locks engage and release together.

When low-level operation is correct, complete a full-height test. Stop and correct uneven movement, hydraulic leaks, or safety malfunctions before putting the lift into service. Trapped air may cause initial vibration; bleed the cylinders and repeat controlled cycles until operation is smooth.

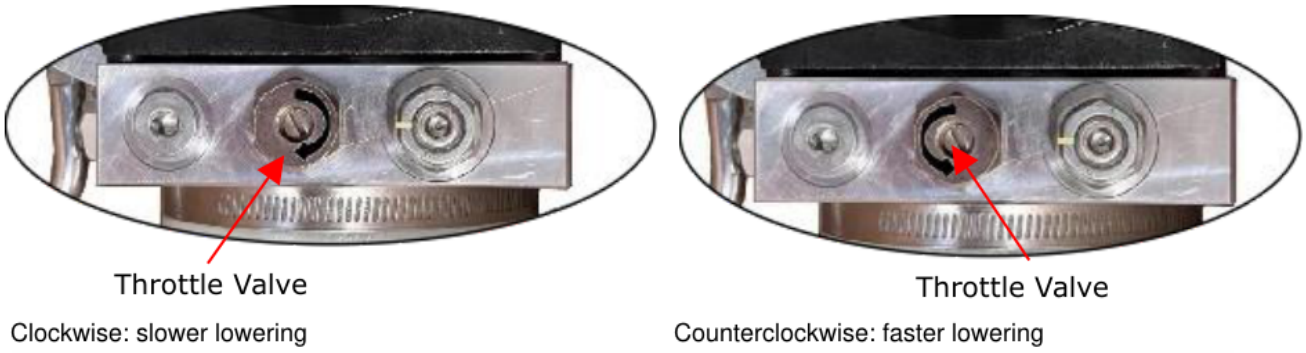

Fig. 55

Hydraulic Circuit

Figure 56 shows the hydraulic circuit. Component key: 1. Filter; 2. Gear pump; 3. Motor; 4. Relief valve; 5. Release valve; 6. Check valve; 7. Throttle valve; 8. Cylinder.

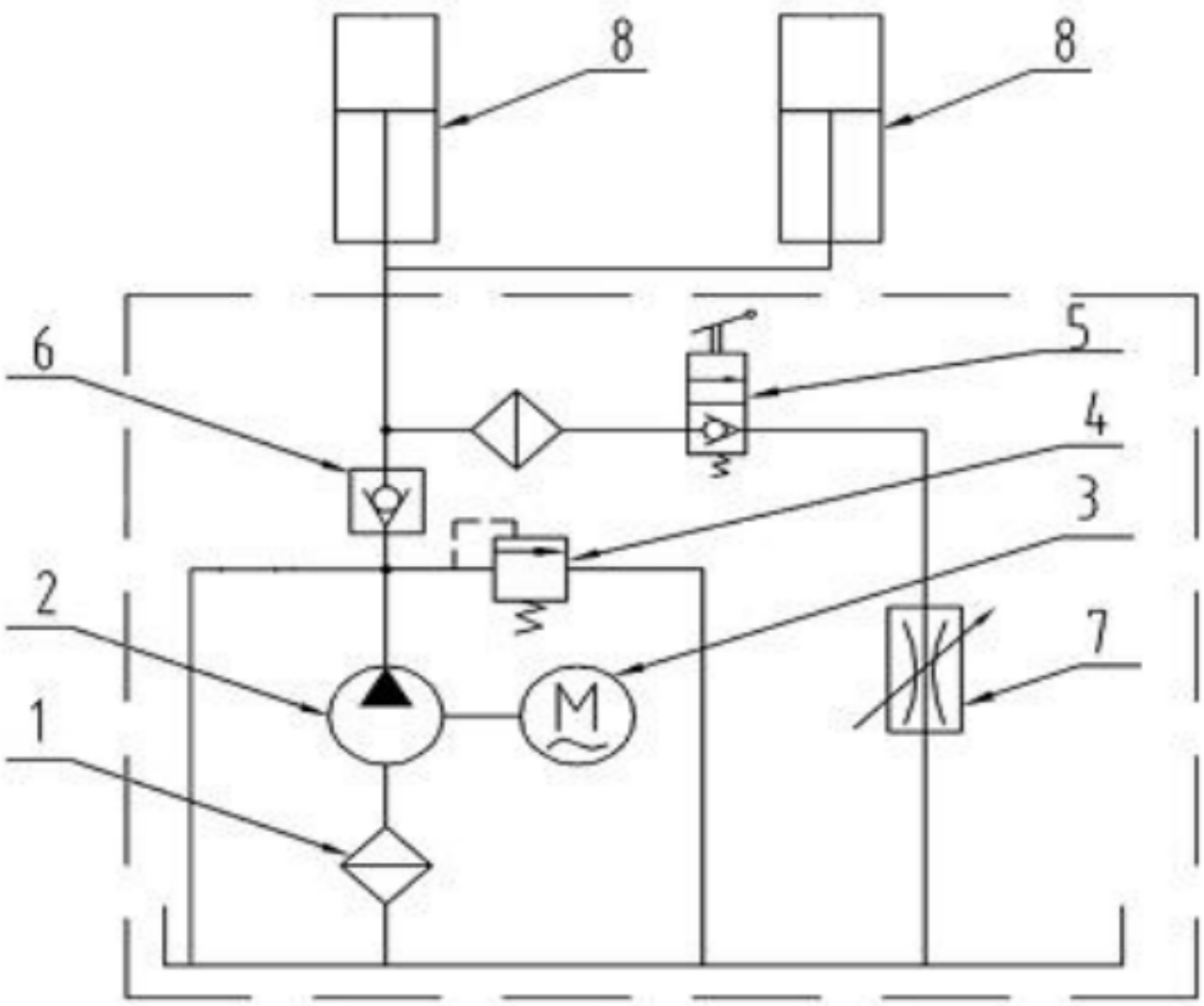

Fig. 56

Operating the Lift

1. Clear the area around the lift. Lower the carriages fully, retract the arms, and swing them away from the vehicle path.

2. Drive the vehicle between the columns in the indicated direction. Position each arm at a lifting point recommended by the vehicle manufacturer.

3. Adjust the pads so all four contact the lifting points together. Press the power-unit UP button until the pads firmly contact the vehicle. Check pad placement and arm-restraint engagement.

4. Raise the vehicle slightly and check that it is stable and balanced. Continue raising slowly to the desired working height.

5. Use the lowering handle to lower the carriages onto the nearest mechanical safety locks. Confirm that both locks are fully engaged before starting vehicle service.

Lowering the Vehicle

1. Remove tools and equipment from beneath and around the vehicle. Keep everyone except the operator clear of the lift area.

2. Press UP to raise the vehicle slightly and unload the safety locks. Operate the safety release, then use the lowering handle to lower the vehicle in a controlled manner.

3. Once the vehicle is fully on the floor, swing the arms clear and retract them to their shortest length.

4. Drive the vehicle away only after all arms and pads are clear.

Inspection and Maintenance

Monthly: retorque the anchor bolts to 111 ft-lb. Check all fasteners, pins, and connections for secure mounting. Lubricate the cables, inspect hydraulic lines for wear and leaks, and test the safety devices. Lubricate rollers and pins with 90-weight gear oil or an equivalent lubricant.

If any anchor cannot hold the specified torque, stop using the lift until the anchor is replaced and the installation is corrected.

Every six months: inspect moving components for wear, interference, and damage. Check and adjust equalizer-cable tension, verify that the columns are plumb, inspect the rubber pads, and check the safety devices. Replace damaged or worn pads as needed.

Every six months: inspect the moon gears and arm locks and verify that all four restraints fully engage. Check the overhead limit switch and the hydraulic-oil level.

Hydraulic cylinders: use ISO VG 46 anti-wear hydraulic oil. Change the oil as needed, depending on use and oil condition.

Complete at least one full raising-and-lowering cycle each day to help purge air from the system. Protect the piston rods from impacts and scratches, and remove debris from the rods and dust seals.

Troubleshooting

Disconnect power before service. Electrical and hydraulic repairs must be performed by qualified personnel. Stop using the lift until the cause of a malfunction is corrected.

SYMPTOM	POSSIBLE CAUSE / CORRECTIVE ACTION
Motor does not run	Check the control button, wiring connections, motor, overhead limit switch, and contactor. Repair the wiring or replace the failed component.
Motor runs; lift does not rise	Check motor rotation, gear-pump operation, release valve, relief/check valves, and oil level. Correct rotation according to the installed motor wiring; repair failed components or add the specified oil.
Lift will not hold position	Inspect the release valve, relief/check valves, cylinders, and fittings for leaks. Repair or replace affected components.
Lift rises slowly	Check for a blocked hydraulic line, low supply voltage, air in the oil, pump leakage, or an excessive load. Clear restrictions, correct electrical faults, restore oil level and bleed air, replace a leaking pump, or reduce the load.
Lift will not lower	Check whether the safety locks are still engaged. Inspect the release valve, safety-release cable, and hydraulic circuit. Release the locks or repair the failed component.

Disposal and Service Information

When the lift can no longer be used safely, remove it from service and dispose of it in accordance with applicable local requirements.

For parts, service, and warranty assistance, contact Quick Lift USA. Have the model and serial number available when requesting help.

Quick Lift USA automatically provides a two-year warranty on all non-wearable parts. Coverage begins on the date of purchase. No registration is required.

3380 S. Power Rd. #105, Gilbert, AZ 85234
602-828-0950
www.quickliftusa.com