Installation and Owner Manual

QLD4P9K LUXE

9,000 lb double four-post lift



Read this manual and all warning labels before installing, operating, or servicing the lift. Keep these instructions available to every operator.

Safety, Warranty, and Contact

Only trained, authorized operators may use this lift. Read this manual and all warning labels before installation, operation, or service.

Never exceed the 9,000 lb total rated lifting capacity. The rating applies to the entire raised platform. Confirm the combined weight of vehicles on the upper runways and distribute the load appropriately.

Lower the platform onto all four mechanical safety locks before storing vehicles or working beneath the lift. Never rely on hydraulic pressure alone to hold the load.

Keep everyone off the lift and out of vehicles while the platform is moving. Clear the area underneath before lowering. Stop operation if any component or safety device is damaged or does not work correctly.

Quick Lift USA automatically provides a two-year warranty on all non-wearable parts. No registration or paperwork is required to activate the warranty.

For parts, service, or warranty assistance: Quick Lift USA, 3380 S. Power Rd. #105, Gilbert, AZ 85234. Call 602-828-0950 or visit www.quickliftusa.com.

Contents

SECTION	PAGE
Installation and Owner Manual	1
Safety, Warranty, and Contact	2
Product Overview	4
Technical Specifications	5
Operator Safety	6
Site, Delivery, and Foundation	7
Electrical Connection	8
Installation: Assembly Sequence	9
Assembly and installation drawings	10
Initial Setup and Testing	29
Raising and Parking Vehicles	30
Inspection and Maintenance	32
Troubleshooting	33
Parts and Assembly References	34
Component drawings	35
Factory parts lists	56
Hydraulic Power-Unit Assembly	64
Packing List	67
Wear-Parts Reference	68
Disposal and Service Information	69

Product Overview

The QLD4P9K LUXE is a double-wide, four-post parking lift designed to store up to four compatible vehicles: two on the raised runways and two underneath. The combined load on the raised platform must not exceed 9,000 lb.

A hydraulic power unit drives the lifting cylinder, while high-strength cables and pulleys raise the platform. Mechanical locks support the platform at the available locking positions, and secondary safety locks provide additional protection.

A single release control operates the mechanical locks. The standard power unit uses 110V, single-phase power and comes prewired with a three-prong plug. A 220V upgrade is available.

Low-profile steel runways, one set of aluminum approach ramps, four drip trays, and one sliding tool tray are included. Hand-pump and pneumatic jacking beams are available separately.



Technical Specifications

These dimensions apply to the current QLD4P9K LUXE configuration. Drive-under clearance is measured beneath the platform while it rests on the top mechanical lock.

SPECIFICATION	VALUE
Model / rated lifting capacity	QLD4P9K LUXE / 9,000 lb total
Locked drive-under clearance	81 in.
Overall height	97-1/2 in.
Overall width, with motor	210 in.
Overall width, without motor	199-1/8 in.
Overall length, with ramps	207 in.
Overall length, without ramps	175 in.
Drive-on runway length	165-1/2 in.
Drive-through clearance, upper platform	177-1/4 in.
Drive-through clearance, beneath lift	190-1/4 in.
Gross weight	3,000 lb
Standard electrical supply	110V, single-phase; three-prong plug
Lifting cable diameter	3/8 in.

Operator Safety

Keep the lift and surrounding area clean, dry, and free of tools, oil, debris, and obstructions. Keep customers and bystanders away during operation.

Confirm vehicle fit, roof clearance, and the combined weight on the upper platform before loading. Center every tire on its runway. Apply the parking brake and use wheel chocks.

Keep vehicle doors closed and watch the lift throughout raising and lowering. No one may remain inside a vehicle or stand on the platform while it moves.

All four columns must be plumb. Check that all four safety locks engage fully at the same level before parking beneath a raised platform.

Removing or installing heavy vehicle components changes load distribution. Follow the vehicle manufacturer's support requirements and use appropriate equipment for the work. Never bypass a safety device.

Site, Delivery, and Foundation

Plan the installation around the complete lift dimensions, vehicle approach, and raised-vehicle clearance. Allow enough room for both upper vehicles, lower vehicles, and safe operation.

Check that the supporting floor is sound and level. The factory specifies concrete with a minimum compressive strength of 3,000 psi. Do not install on defective or cracked concrete.

Inspect the shipment for missing components and transport damage. Record any damage on the delivery paperwork and contact the carrier and Quick Lift USA promptly.

Use lifting and handling equipment rated for the component weights. Keep personnel clear of suspended loads and protect cables, hoses, and finished surfaces.

Electrical Connection

The standard lift uses 110V, single-phase power and comes prewired with a three-prong plug. Connect it to a properly grounded receptacle compatible with the installed power unit. Never remove or bypass the grounding prong.

A qualified electrician must verify that the supply and protective devices match the installed motor and power-unit ratings. Disconnect and secure the power before installation, maintenance, or repair.

A 220V upgrade is available. Only qualified personnel may configure the correct power unit and electrical connection for that upgrade. The standard 110V unit must not be connected directly to 220V.

For electrical faults, disconnect the supply and have a qualified electrician diagnose the system. Do not swap supply conductors as a troubleshooting method for the single-phase motor.

Installation: Assembly Sequence

Follow the assembly drawings in order. Install the columns and crossbeams, column top plates, and safety components first. Seat each safety hook in the designated safety-ladder opening.

Install the runways, cables, and guards. Mount the power unit and connect the hydraulic lines. Assemble the manual lock-release linkage before installing trays, ramps, wheel stops, and drip trays.

Complete electrical connection and fill the hydraulic reservoir with the specified oil. Start the lift briefly and confirm that each cable is correctly seated in its pulley.

Check column plumb, crossbeam clearance, cable tension, and runway level. Install and secure the anchors using the supplied hardware and installation references. Place all guards and warning labels before testing.

Columns and Crossbeams

Position the main column, auxiliary columns, and crossbeams as shown in Z-1. Match the columns to their intended positions and support components securely during assembly.

Z-1

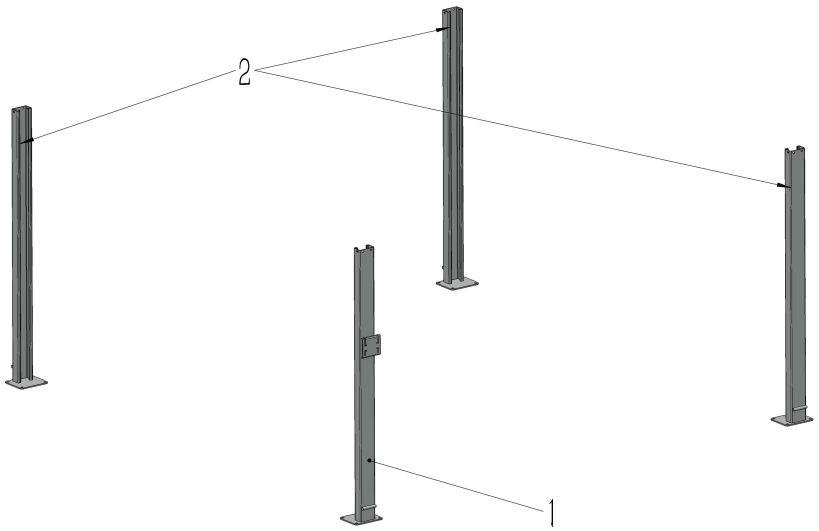

Column Top Plates and Safety Ladders

Install the column top plates and safety ladders as shown in Z-2. Seat the crossbeam locks in the safety-ladder openings and keep all four assemblies at the same level.

Z-2

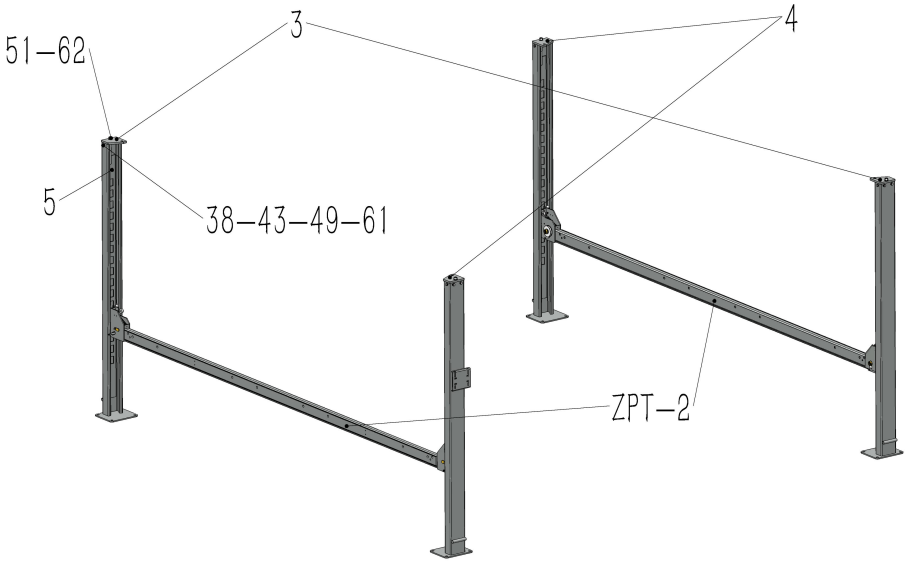

Column Top-Plate Detail

Use Z-2-1 to assemble the top plate, safety ladder, washers, and nuts. Keep the factory part references and hardware arrangements shown in the drawing.

Z-2-1

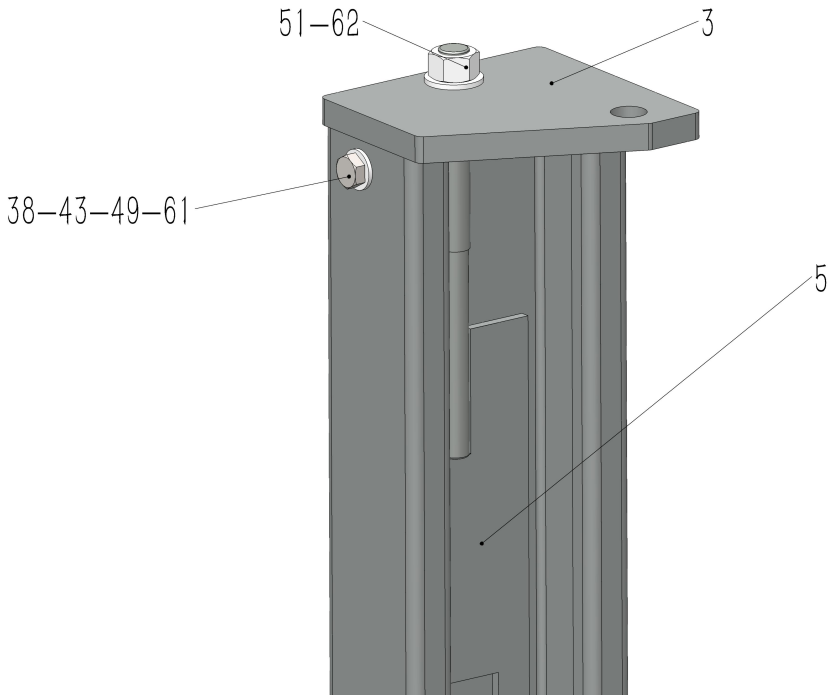

Crossbeam Safety-Lock Detail

Use Z-2-2 to confirm the crossbeam lock position within the column. The hook must move freely and fully engage the designated safety opening.

Z-2-2

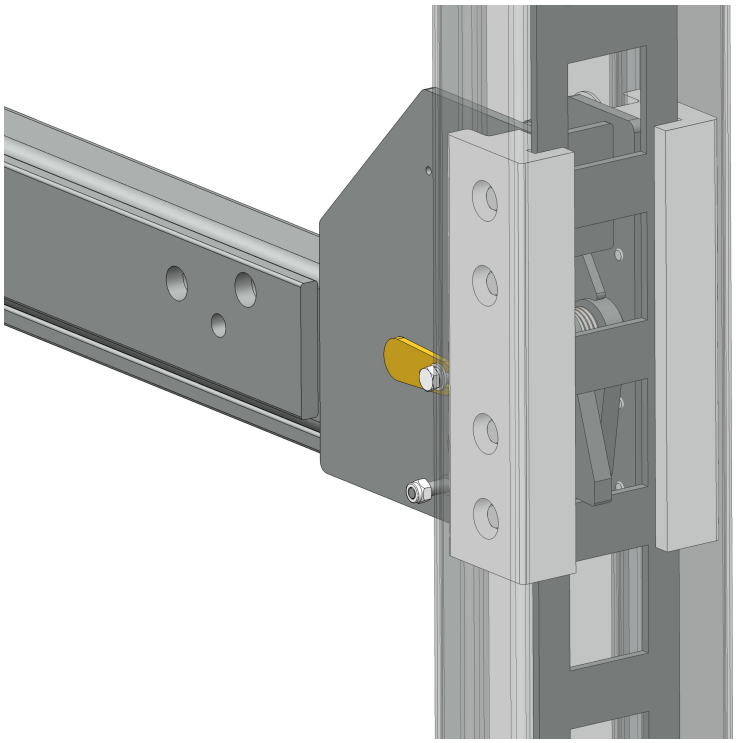

Runways and Lifting Cables

Install the runways and lifting cables according to Z-3. Route each cable to its designated column and secure all fittings, washers, and nuts.

Z-3

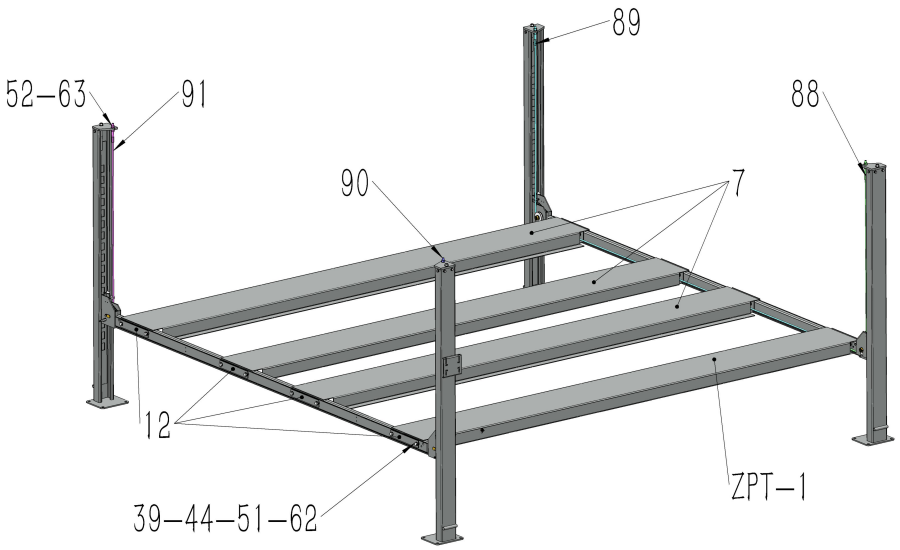

Runway and Crossbeam Connections

Use Z-3-1 to connect the runways to the crossbeams with the specified hardware. Verify correct alignment before tightening the connections.

Z-3-1

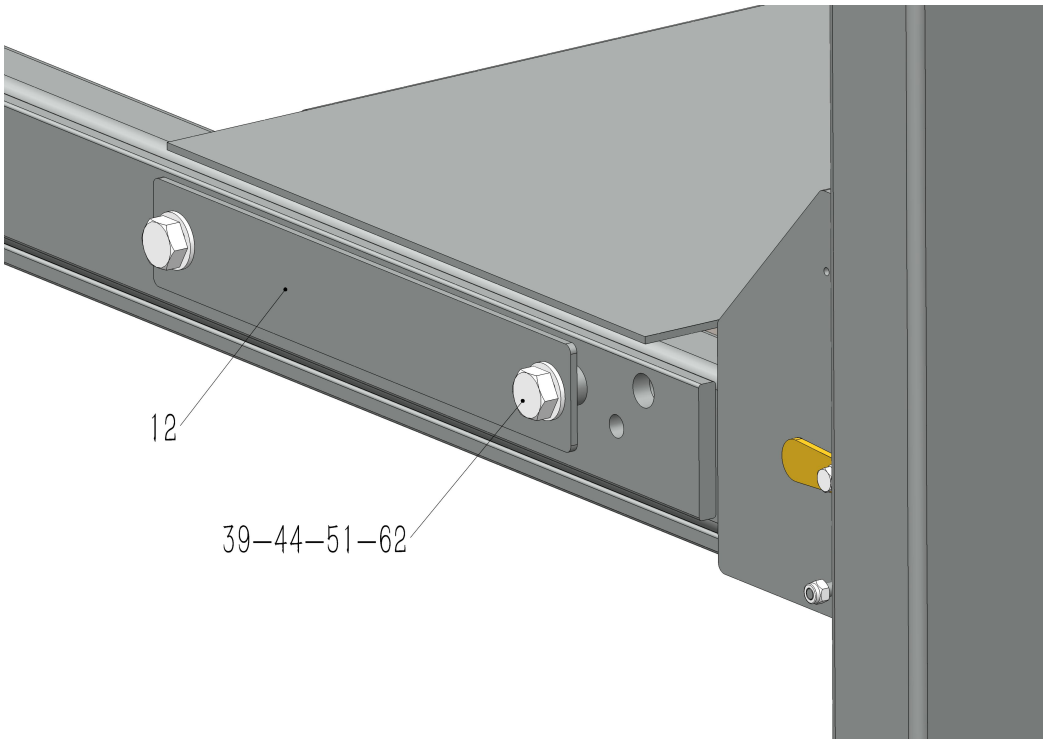

Cable Connection at the Column

Use Z-3-2 to secure the cable at the column top. Keep the cable aligned with its pulley route and use the specified washers and nuts.

Z-3-2

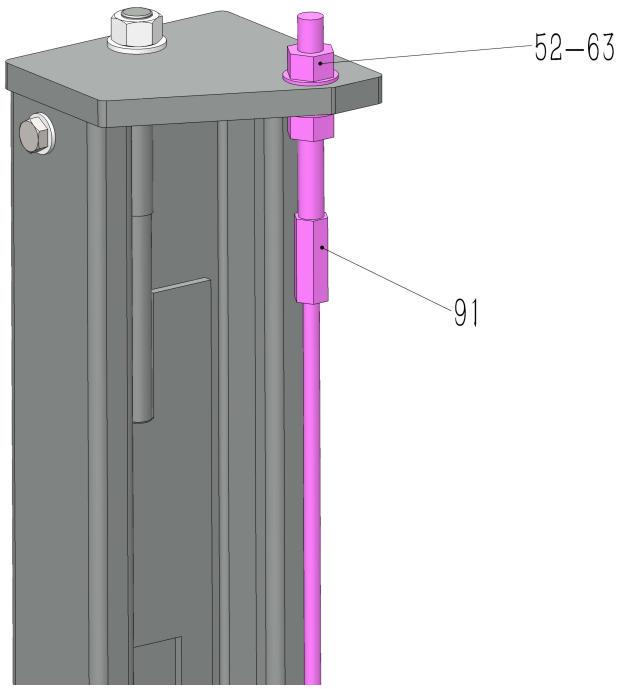

Crossbeam Safety Guard

Install the guard shown in Z-3-3. Keep moving components clear of the guard and secure its fasteners.

Z-3-3

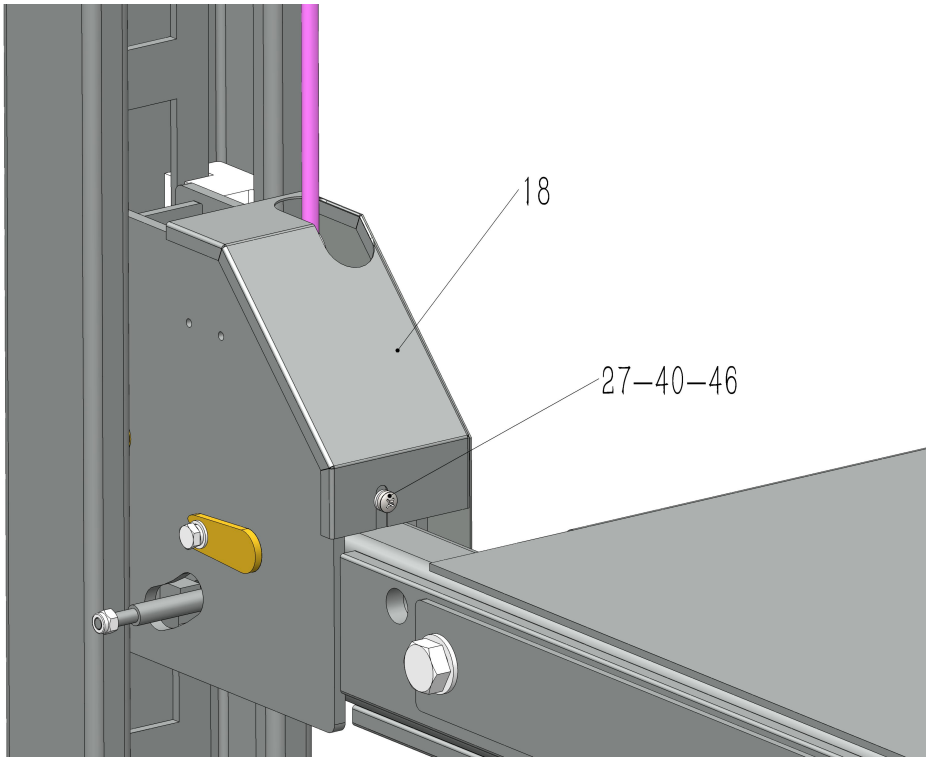

Pulley Guard and Cable Route

Use Z-3-4 to verify the cable route and guard position. Cables must stay in their pulley grooves and must not be pinched, twisted, or rubbing against other components.

Z-3-4

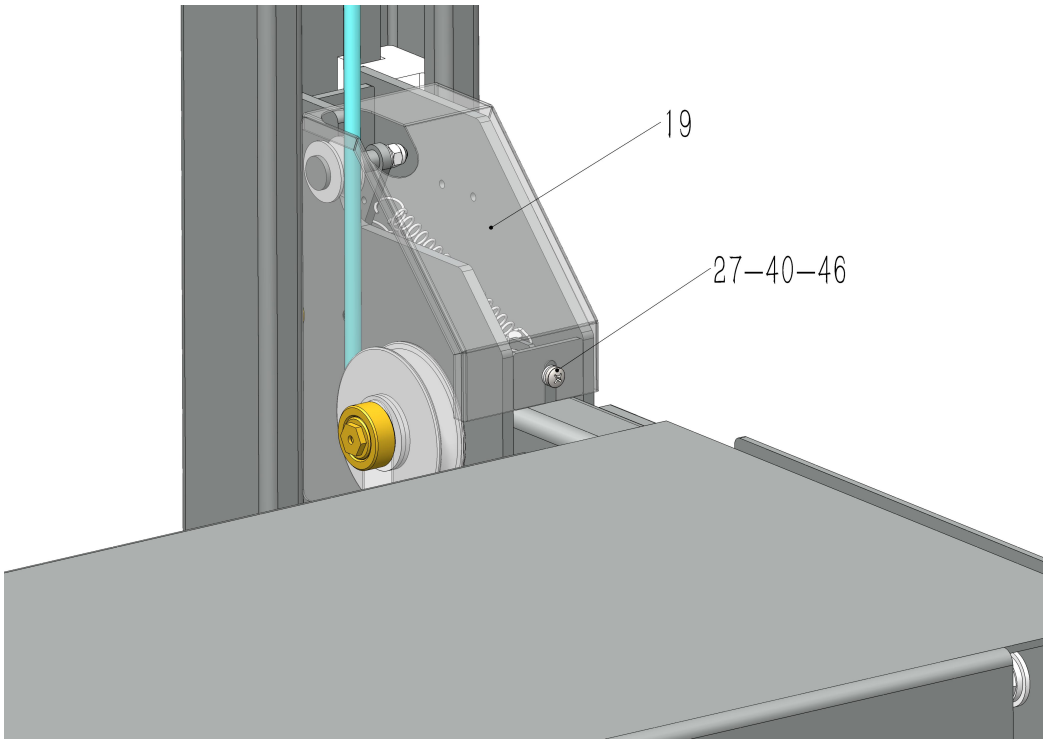

Power Unit and Hydraulic Lines

Mount the power unit and connect the hydraulic lines as shown in Z-4. Keep fittings clean, support the lines correctly, and check for leaks during startup.

Z-4

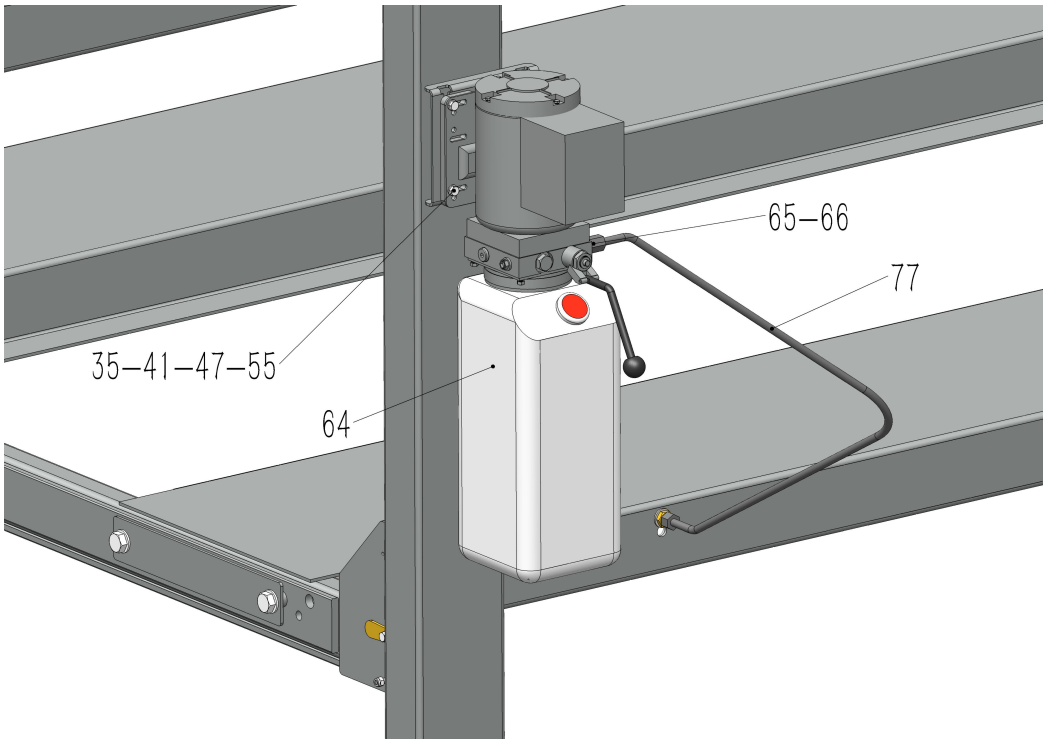

Manual Lock-Release Linkage

Install the manual release mechanism according to Z-5. Align the rods and joints so the control operates the complete lock-release system.

Z-5

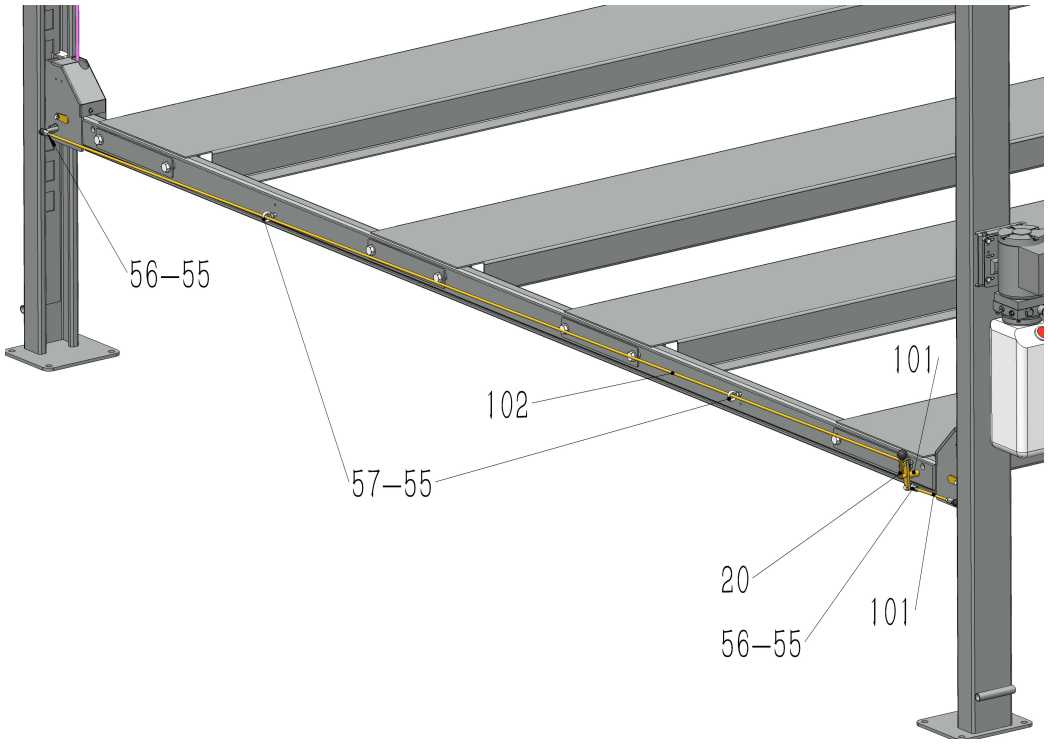

Lock-Release Rod: Column Connection

Use Z-5-1 to install the release rod at the column. Confirm that the linkage moves freely and returns correctly when released.

Z-5-1

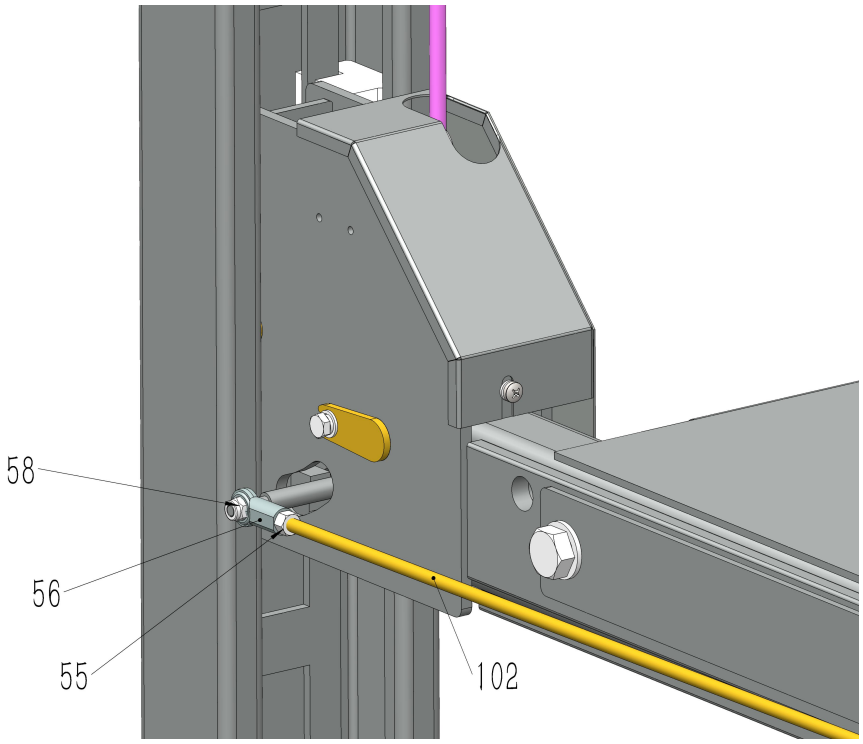

Lock-Release Rod: Crossbeam Connection

Use Z-5-2 to assemble the release rod and its supports. Keep the rod aligned and secure the specified fasteners.

Z-5-2

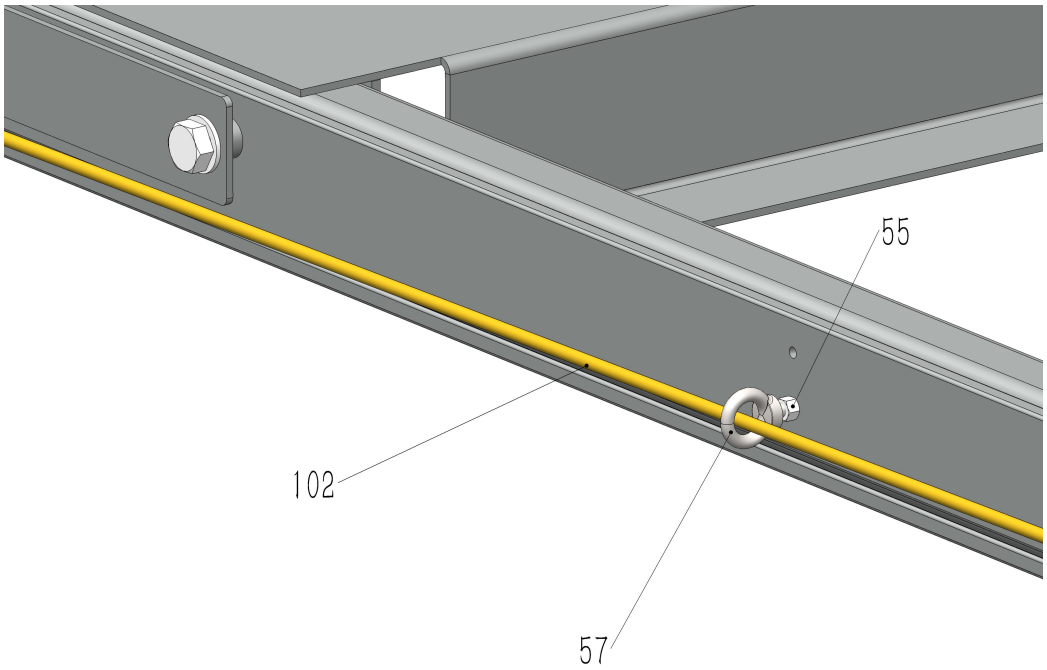

Lock-Release Rod: Opposite Connection

Use Z-5-3 to complete the opposite release-rod connection. Verify free movement throughout the linkage.

Z-5-3

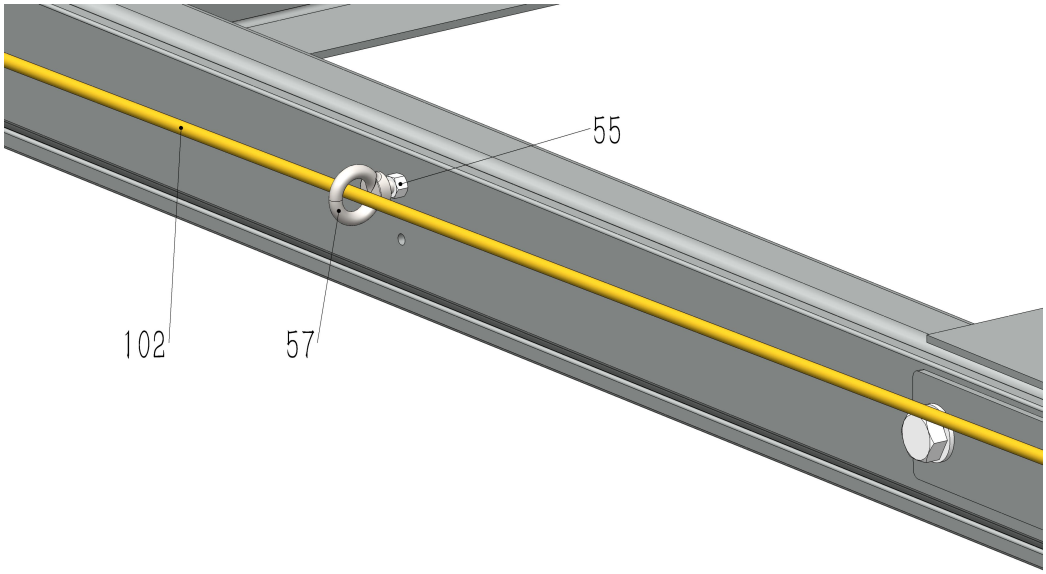

Lock-Release Handle

Use Z-5-4 to install the handle and connecting components. Confirm that operating the handle releases all four primary locks after the load has been raised off them.

Z-5-4

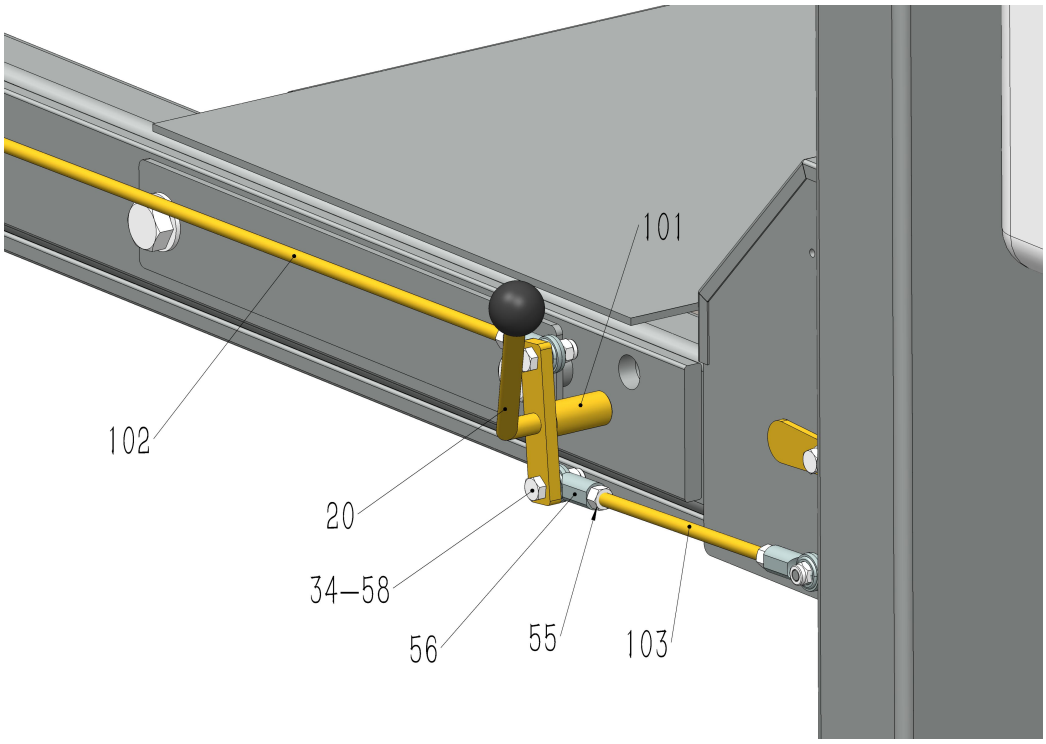

Complete Lock-Release Mechanism

Use Z-5-5 to complete and inspect the release linkage. Do not operate the lift until every lock engages and releases correctly.

Z-5-5

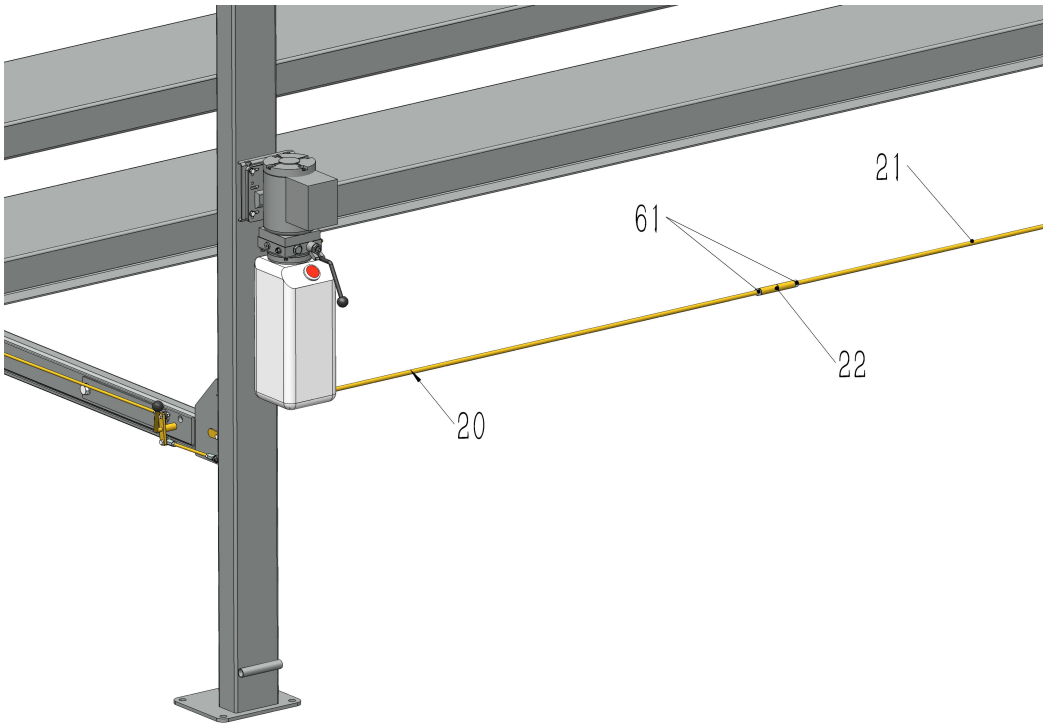

Ramps, Stops, and Trays

Install the approach ramps, sliding tray, wheel stops, rubber chocks, and drip trays as shown in Z-6. Secure the ramp attachments and confirm that the stops are in place.

Z-6

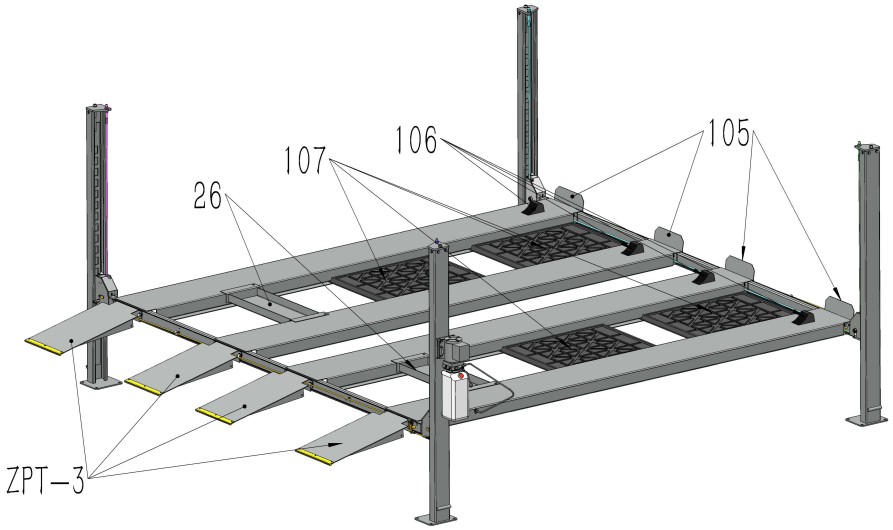

Caster Assemblies

Z-7 identifies the caster components and their attachment points. Reposition the lift only when it is unloaded. Do not move the lift with a vehicle on the platform.

Z-7

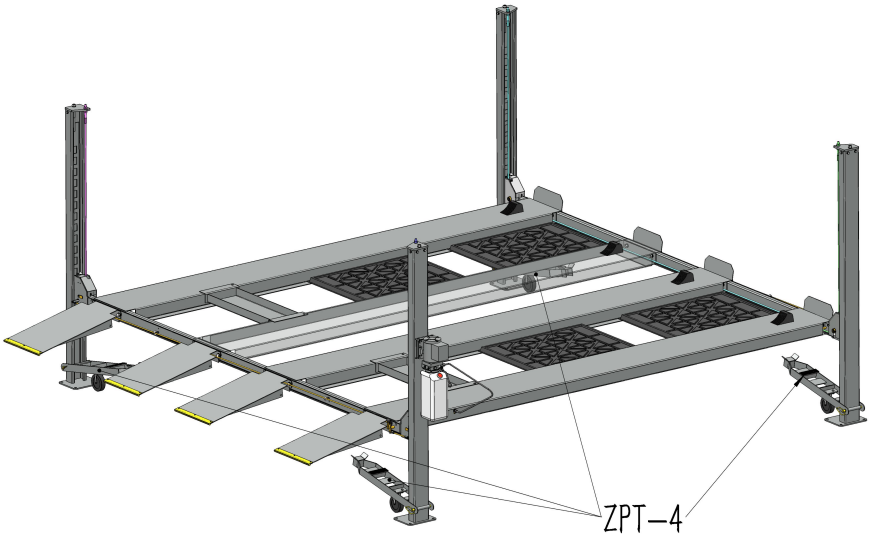

Caster Connection Detail

Use Z-8 to identify the caster attachment hardware. Before lifting a vehicle, return the lift to its stationary operating position and check that all supports are secure.

Z-8

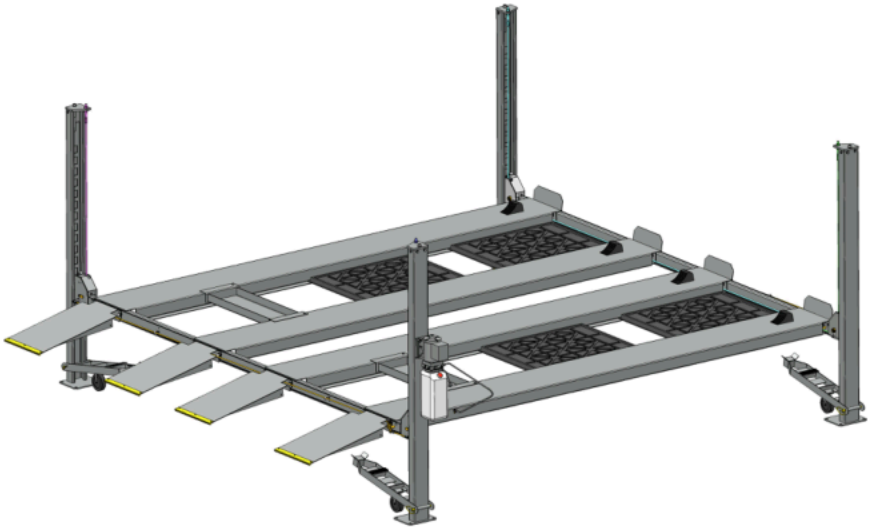

Initial Setup and Testing

Fill the power-unit reservoir with N32 or N46 hydraulic oil as specified by the factory. Check all hydraulic connections before starting the motor.

With no vehicle on the lift, raise the platform slightly. Confirm that every cable is correctly seated and retained in its pulley, then remove temporary assembly supports safely.

Lower the platform onto the locks and confirm that all four hooks engage fully. Lower to the bottom and adjust the cable nuts so all four cables have even tension.

Run at least two complete raising-and-lowering cycles without a load. Repeat the lock checks at several heights and inspect for leaks, binding, uneven travel, or abnormal noise.

Check column plumb, slide-block clearance, and platform level. Adjust the designated nuts to level the platform at the locked position, then secure the adjustments. Do not load the lift until every check passes.

Raising and Parking Vehicles

1. Inspect the lift, locks, cables, hydraulic lines, anchors, and controls. Keep the area clear and confirm that the combined upper-platform load will not exceed 9,000 lb.

2. Drive carefully onto the runways. Center the tires, close the doors, apply the parking brake, and position the wheel chocks. No one may remain in the vehicle.

3. Press and hold the raise control. Stop at low height to check stability and tire position. Continue only when both vehicles are supported securely.

4. Raise the platform to the desired available locking height, then lower it onto all four mechanical locks. Verify full engagement at the same height before parking vehicles underneath.

5. Confirm roof clearance before driving lower vehicles beneath the platform. The maximum drive-under clearance on the top lock is 81 in. Switch off power after use.

Lowering the Platform

1. Remove all vehicles and obstructions from beneath the lift. Clear people, tools, trays, and support equipment from the lowering area.

2. Raise the platform slightly to take the load off the mechanical locks. Never force the release while the platform is resting on the locks.

3. Operate the single lock-release control, then hold the hydraulic lowering control to lower the platform smoothly. Watch the full platform and keep the area clear.

4. Stop if any lock fails to release, the platform moves unevenly, or another fault appears. Correct the condition before continuing.

5. When the platform is fully lowered, remove the chocks as appropriate and drive the upper vehicles off carefully. Switch off the power.

Inspection and Maintenance

Before each use: listen and watch for correct lock operation. Check free latch movement, full engagement, hydraulic leaks, cable damage and loose cable fittings, pulley retaining rings, loose hardware, damaged wiring, and cracks near the columns.

Inspect cables in both raised and lowered positions. Check pulley and shaft lubrication. Stop operation if cables are frayed, a safety device malfunctions, or the lift shows damage.

Weekly: check anchors where installed, floor condition, oil level, fasteners, and free pulley movement. Correct loose hardware and investigate excessive pulley-shaft wear.

At least annually: grease the pulley shafts and inspect cables and moving components for excessive wear. Replace worn or damaged components before further operation.

Change hydraulic oil as needed, depending on use and oil condition. Keep the reservoir and hydraulic system clean. Disconnect and secure the power before service. Qualified personnel must perform electrical and hydraulic repairs.

Troubleshooting

Stop using the lift until the cause of a fault is corrected. Disconnect the power before inspection or service.

SYMPTOM	CHECK / CORRECTIVE ACTION
Motor does not run	Verify supply and controls. Have a qualified electrician inspect the motor connection and wiring.
Motor runs, but lift does not rise	Check oil level, suction line, hydraulic leaks, and valve operation. Have a qualified technician diagnose motor or pump faults.
Platform slowly loses height	Inspect the check and release valves and hydraulic components for leaks. Clean or repair the affected components.
Safety lock fails to work	Check hook position, column alignment, linkage, and return springs. Do not use the lift until all locks work correctly.
Electrical fault or abnormal operation	Disconnect the supply. Have qualified personnel diagnose and repair the fault. Contact Quick Lift USA for assistance.

Parts and Assembly References

The following factory drawings and tables identify the original components, fasteners, and quantities. Use the reference numbers when ordering parts or checking assembly.

Component Drawing 1

1-2-5-23-24-26

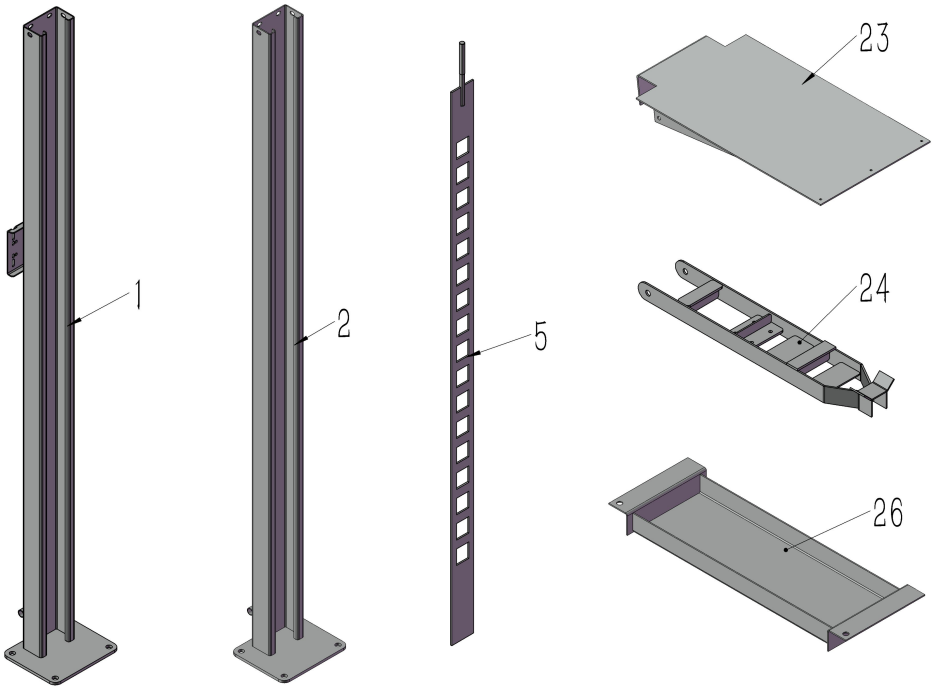

Component Drawing 2

3-4-8-9-10-11-12-14-15-16-17-22-25

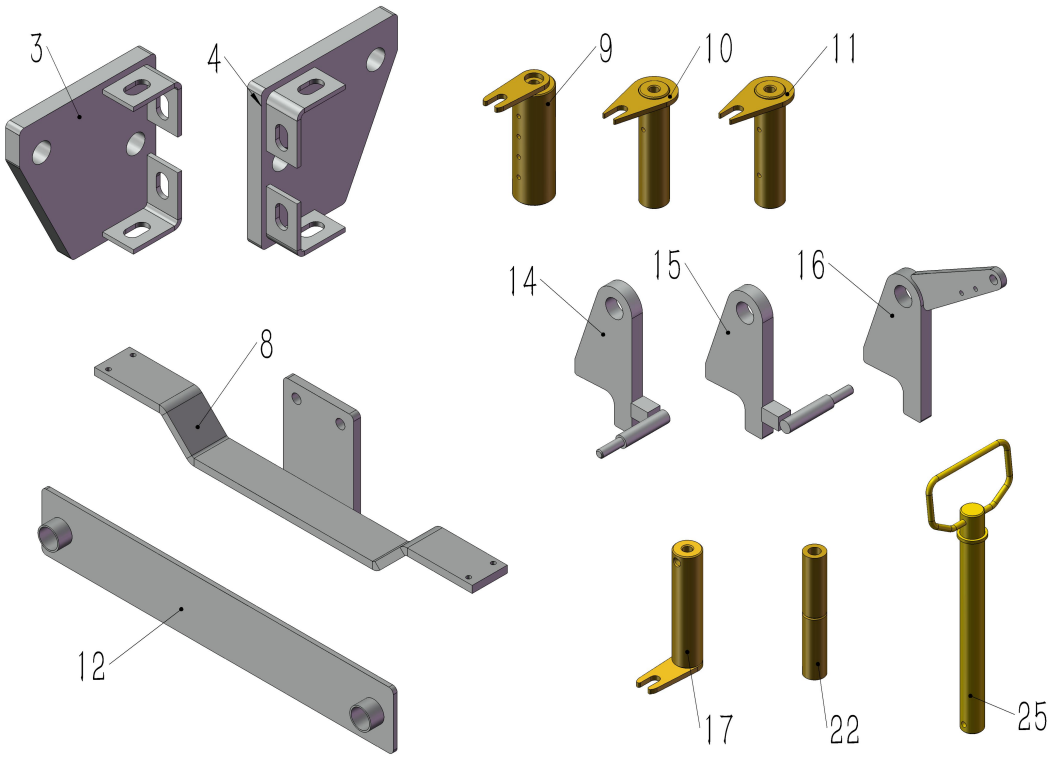

Component Drawing 3

6-7-13-20-21

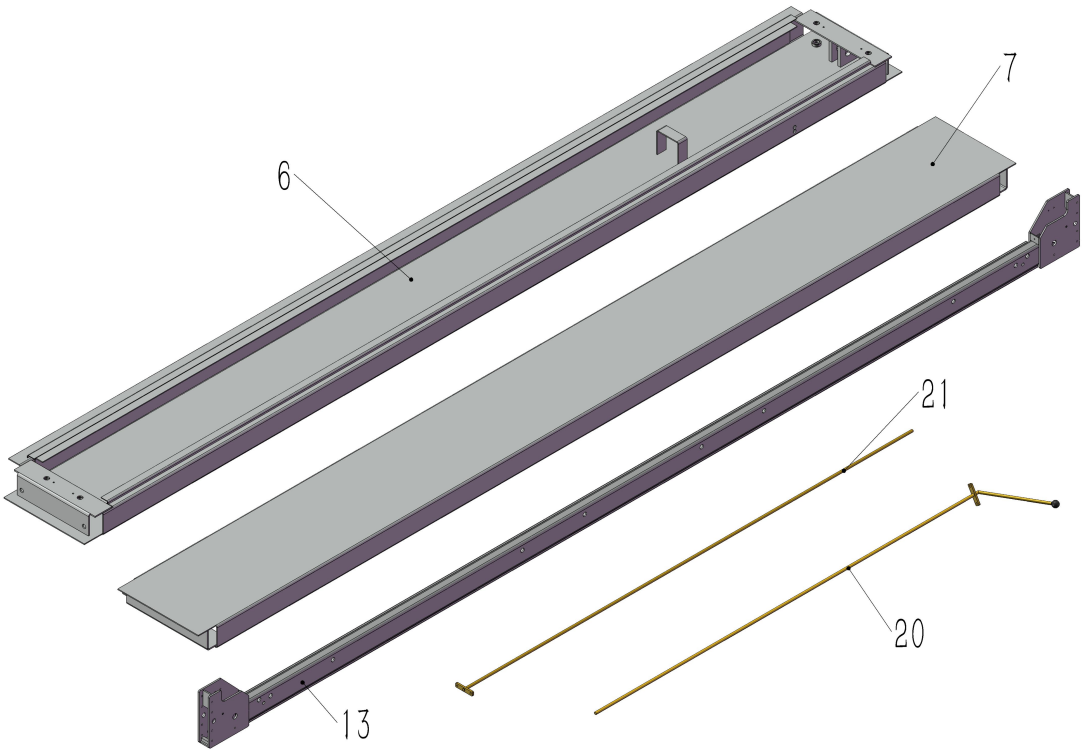

Component Drawing 4

18-19

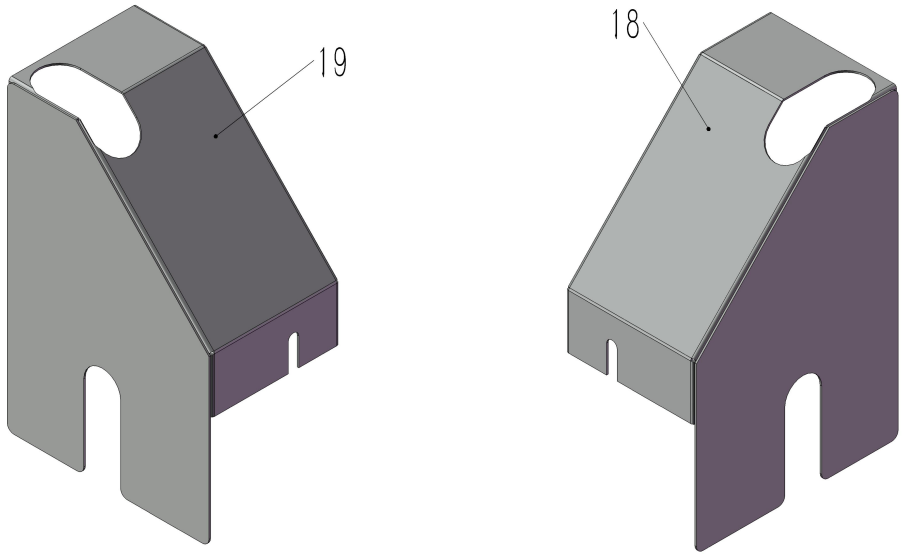

Component Drawing 5

27-28-29-30-31-32-33-34-35-36-37-38-39-40-41-42-43-44

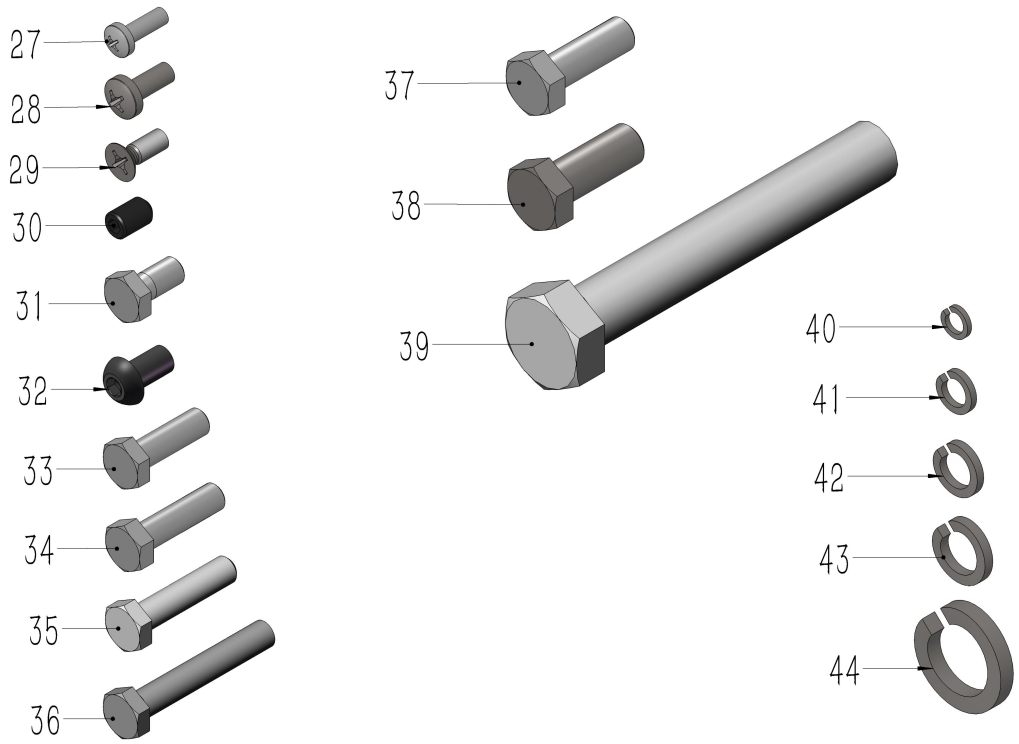

Component Drawing 6

45-46-4748-49-50-51-52-53-54-55-56-57-58-59-60-61-62-63

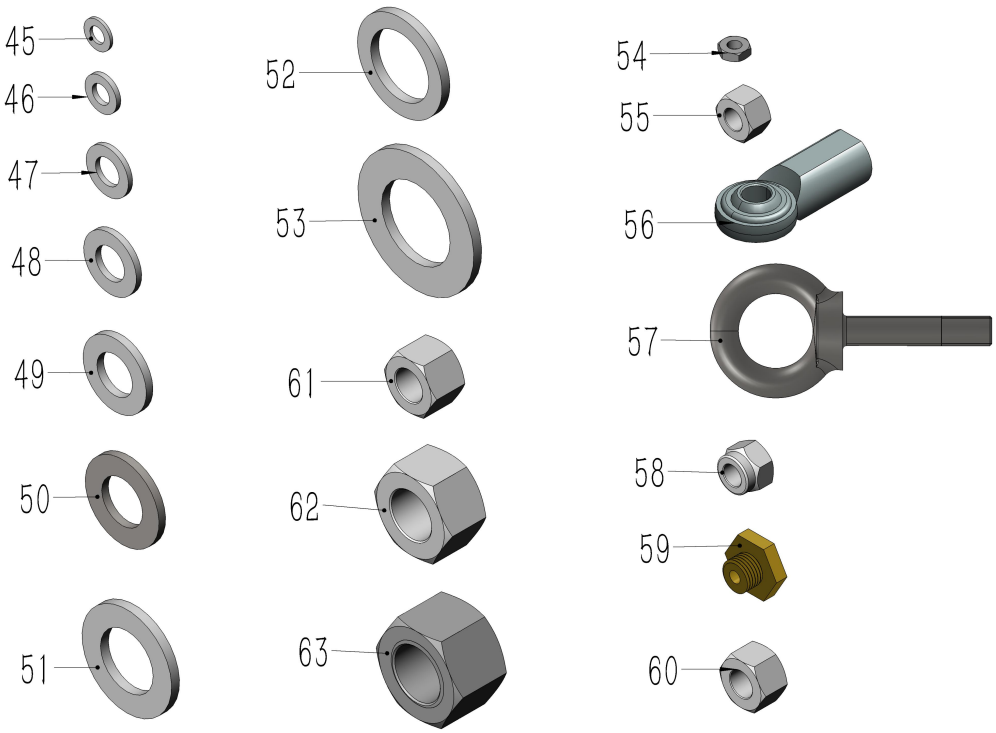

Component Drawing 7

64-67-77-78-82

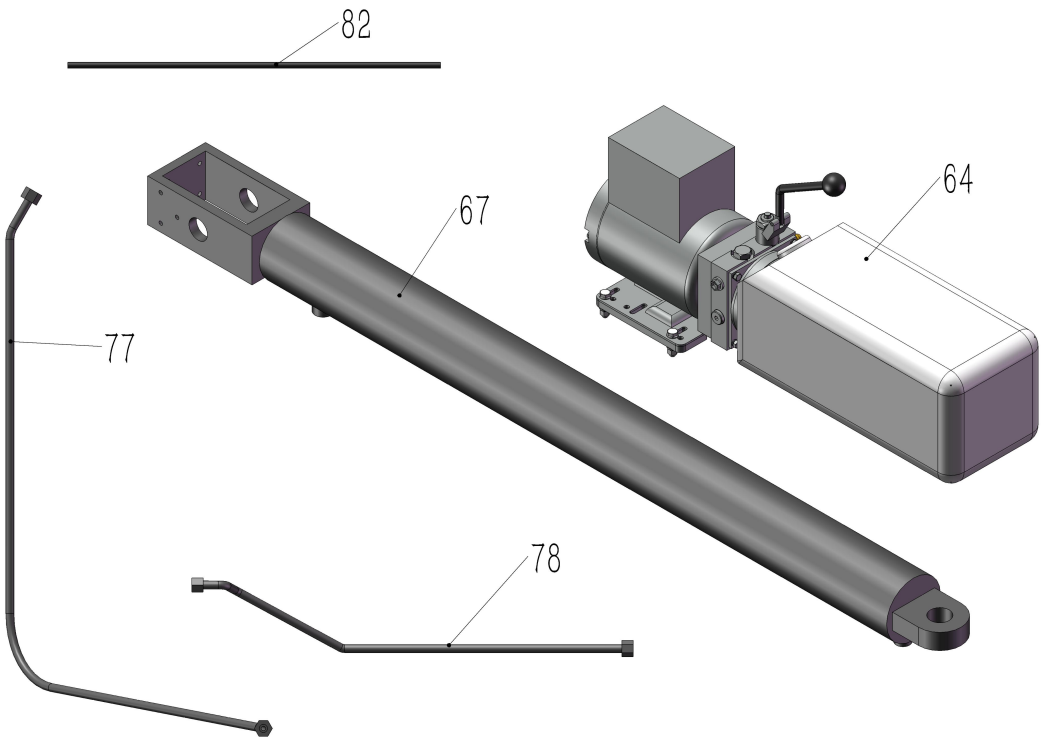

Component Drawing 8

65-66-68-69-70-71-72-73-74-75-76-79-80-81

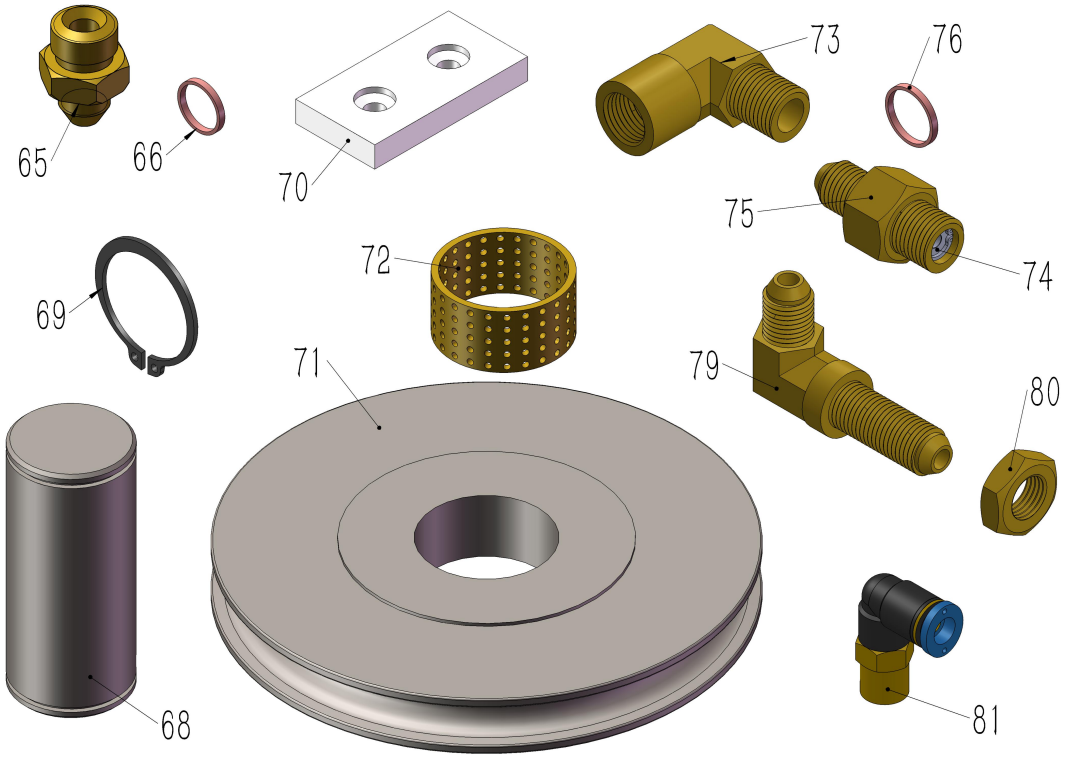

Component Drawing 9

83-84-85-86-87-92-93-94-95-96-97-98-99

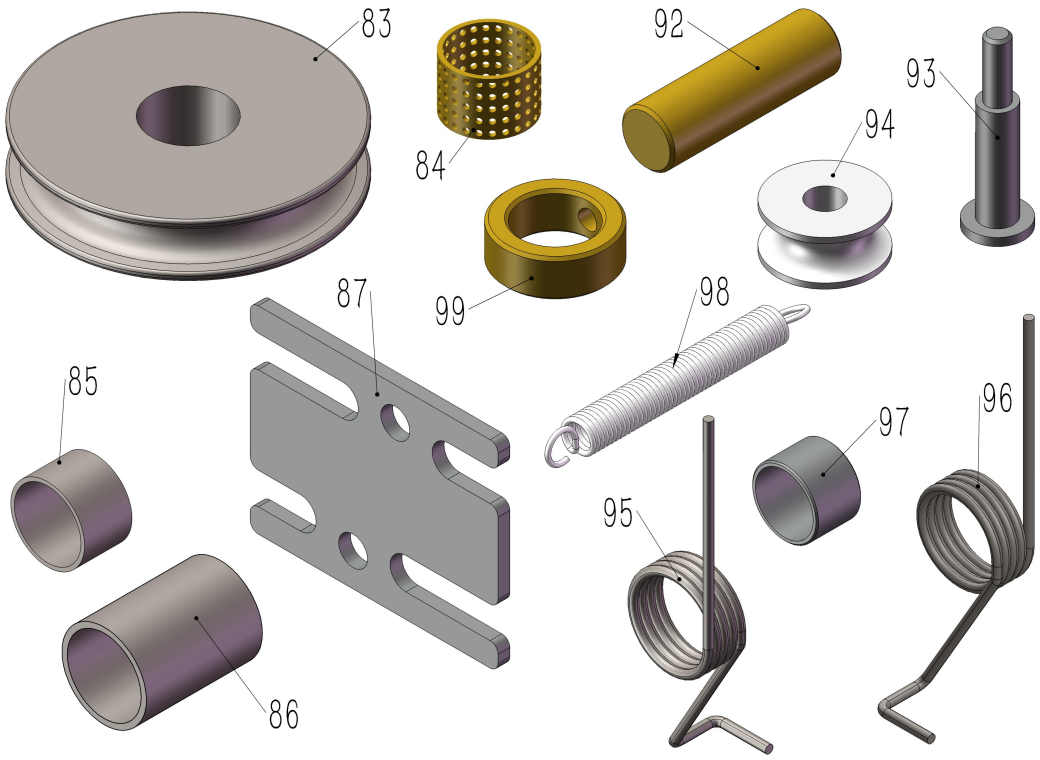

Component Drawing 10

88-89-90-91-102-107

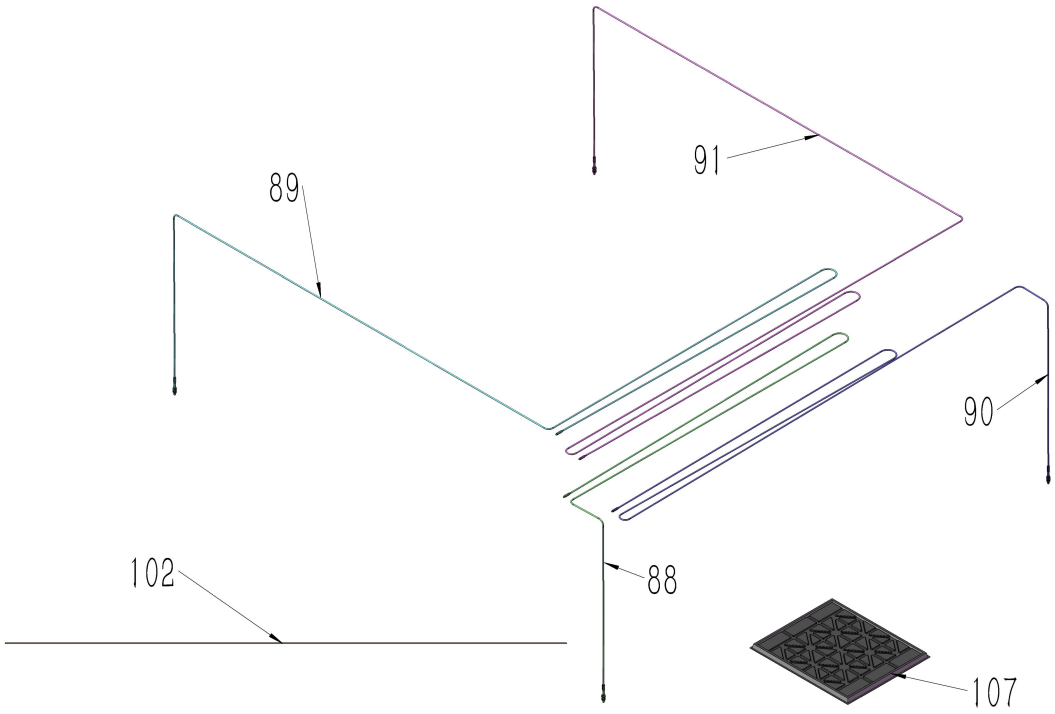

Component Drawing 11

100-101-103-106-108-110

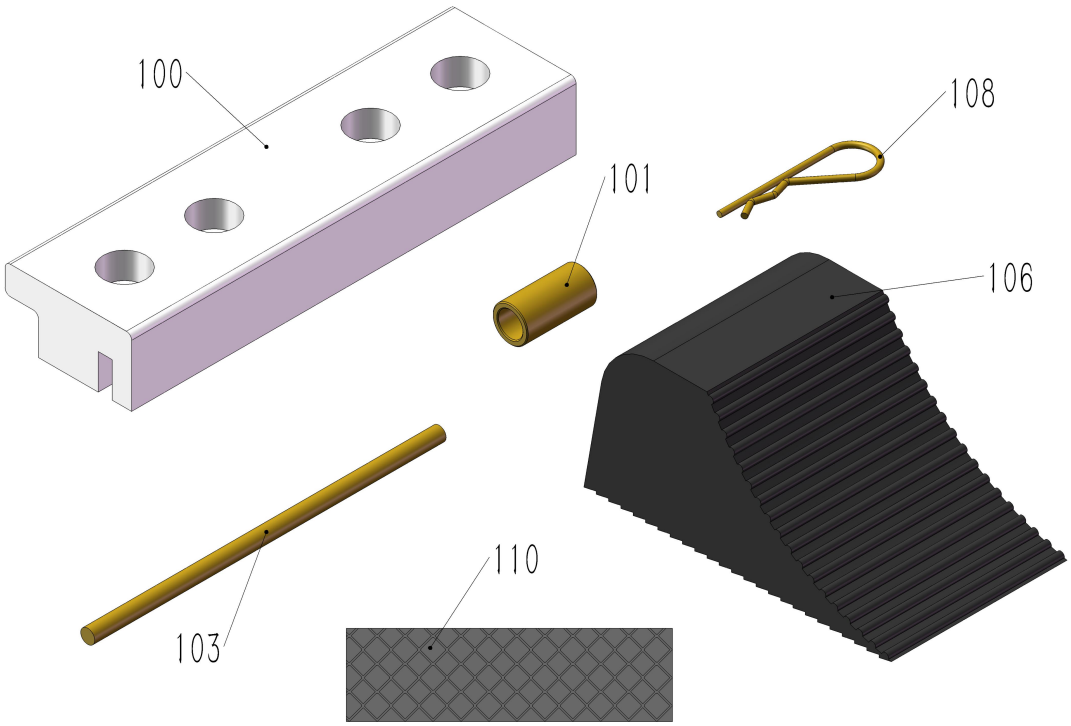

Component Drawing 12

104-105-109

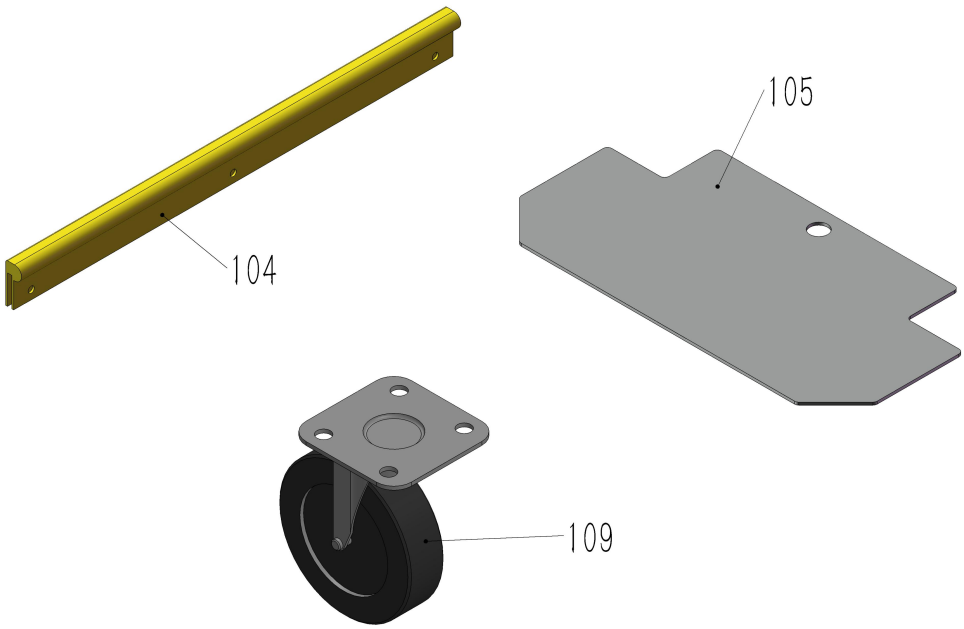

Component Drawing 13

ZPT-1

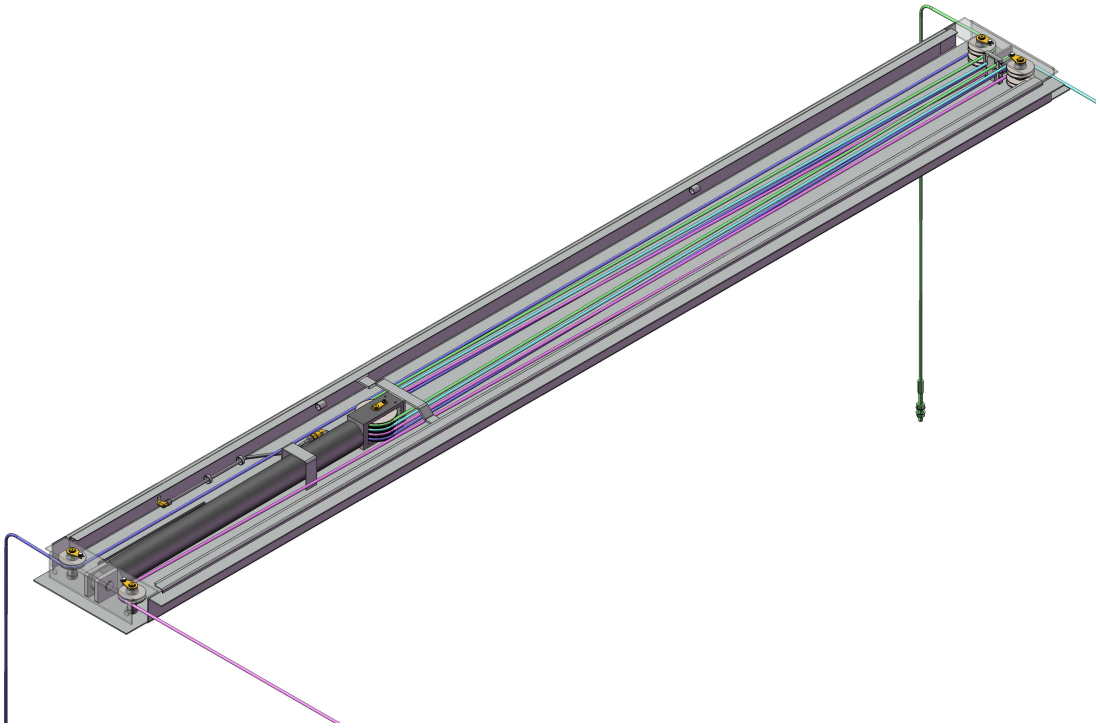

Component Drawing 14

ZPT-1-1

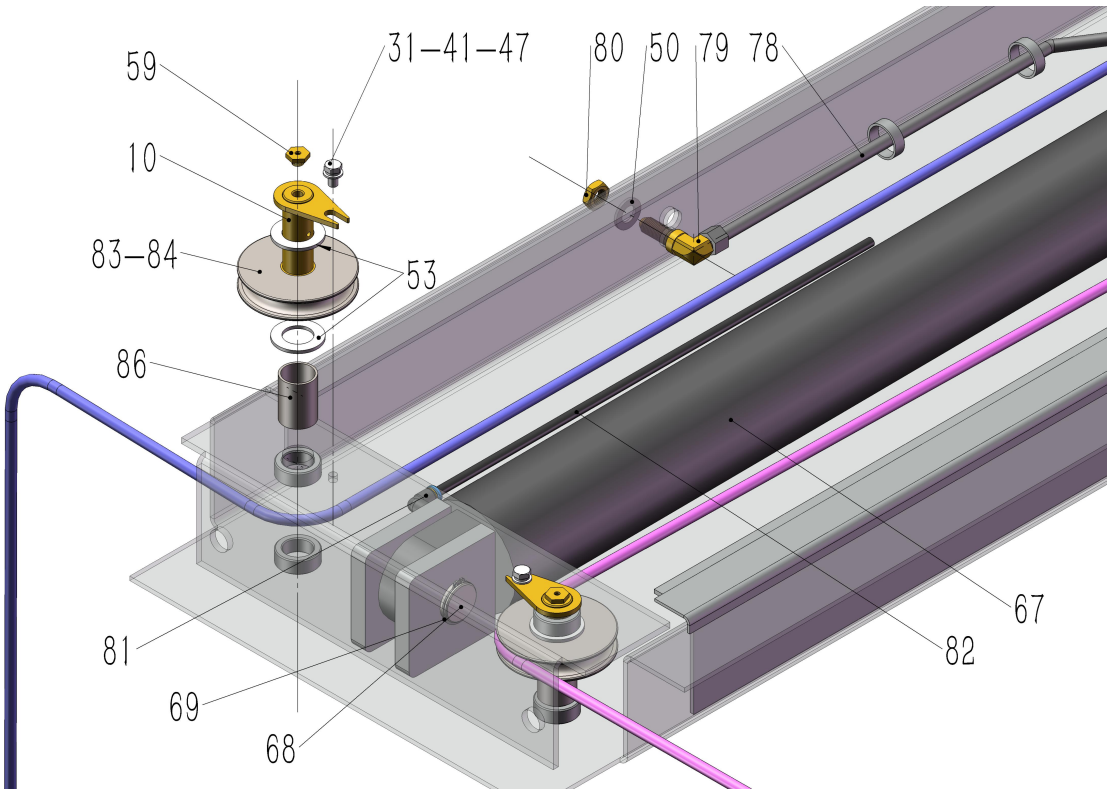

Component Drawing 15

ZPT-1-2

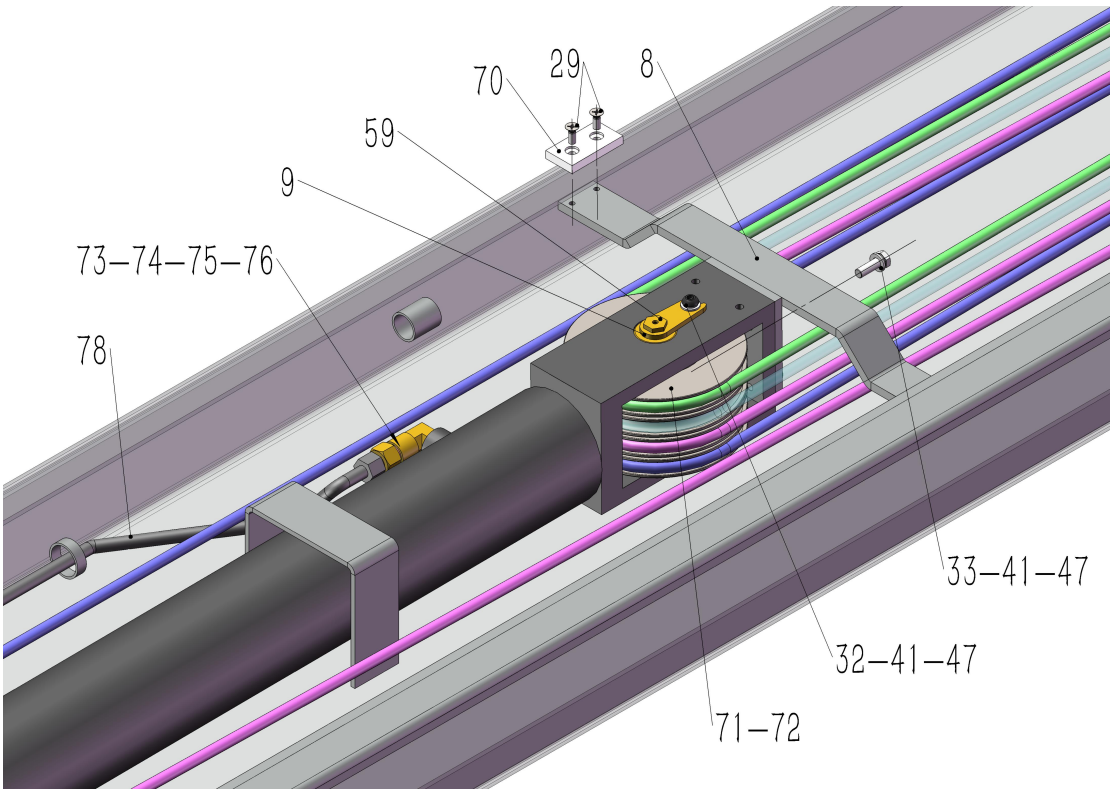

Component Drawing 16

ZPT-1-3

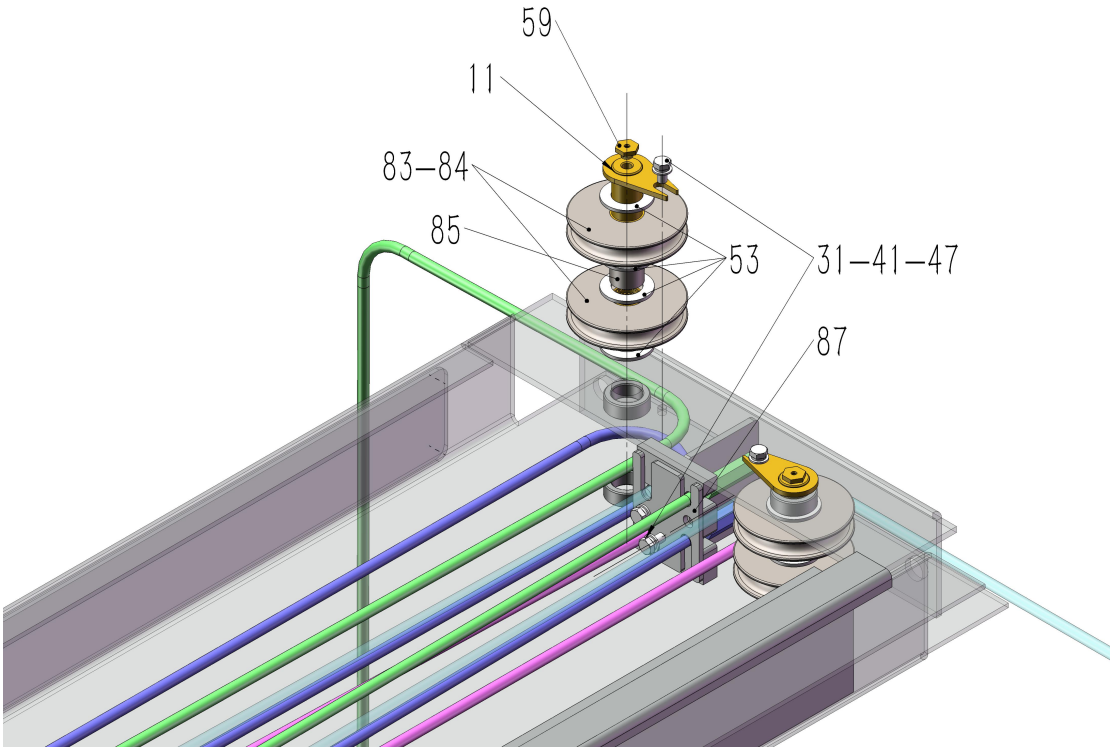

Component Drawing 17

ZPT-2

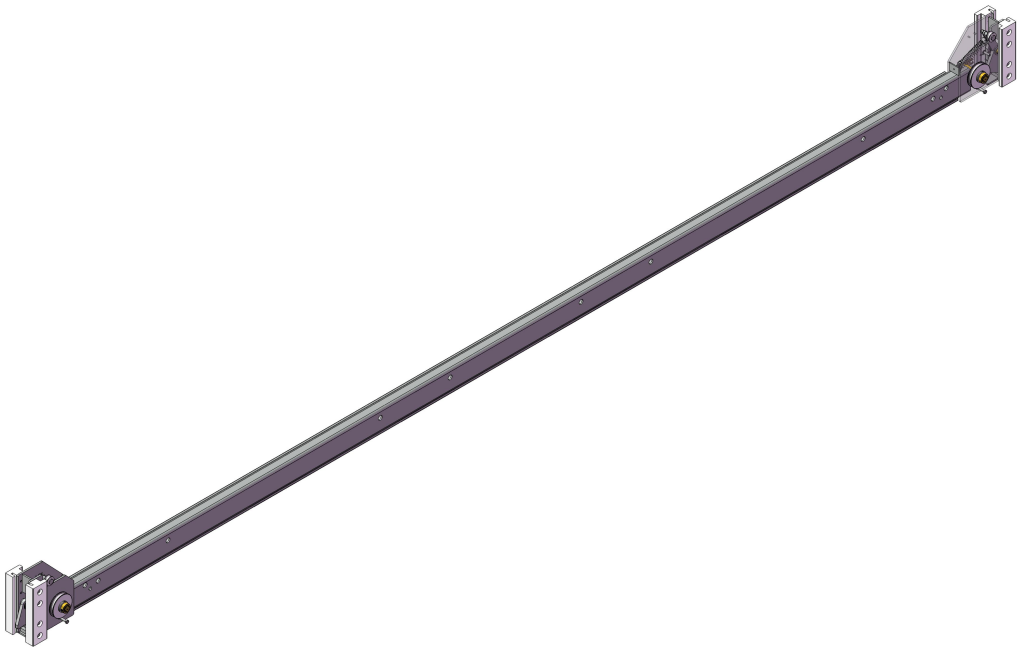

Component Drawing 18

ZPT-2-1

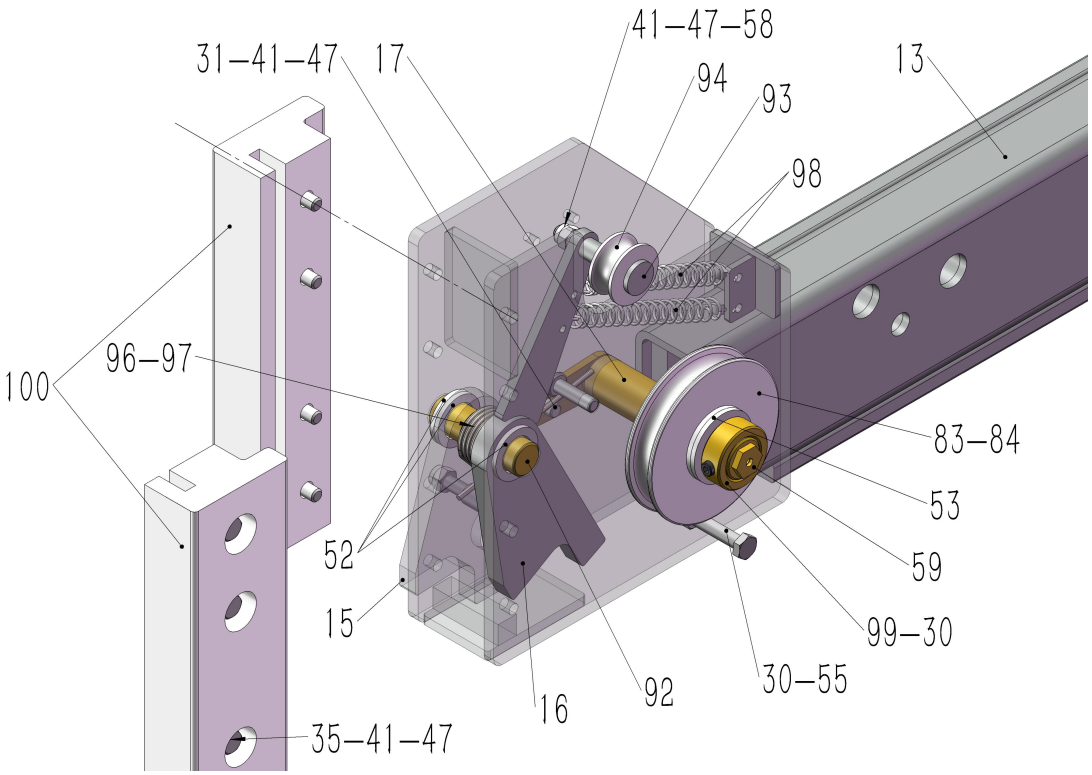

Component Drawing 19

ZPT-2-2

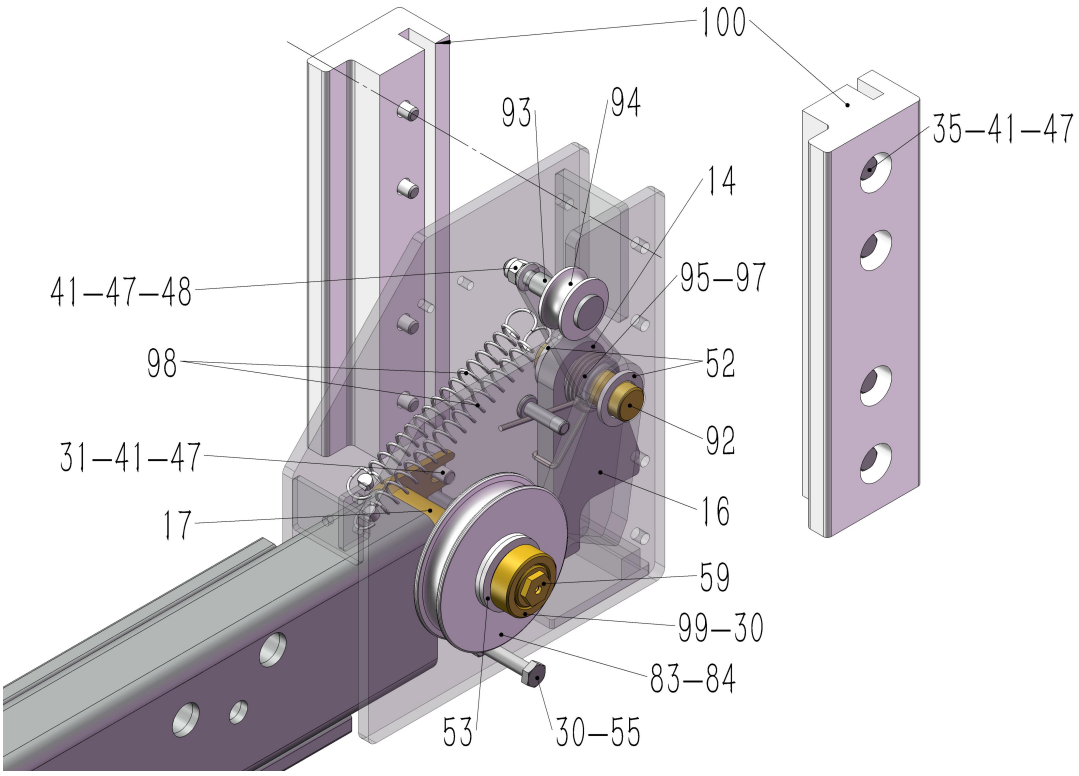

Component Drawing 20

ZPT-3

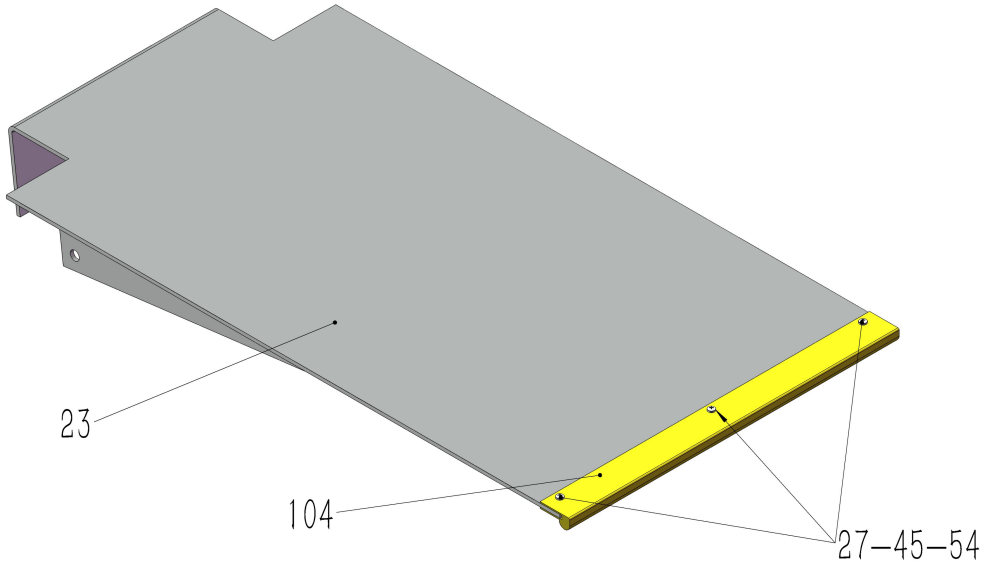

Component Drawing 21

ZPT-4

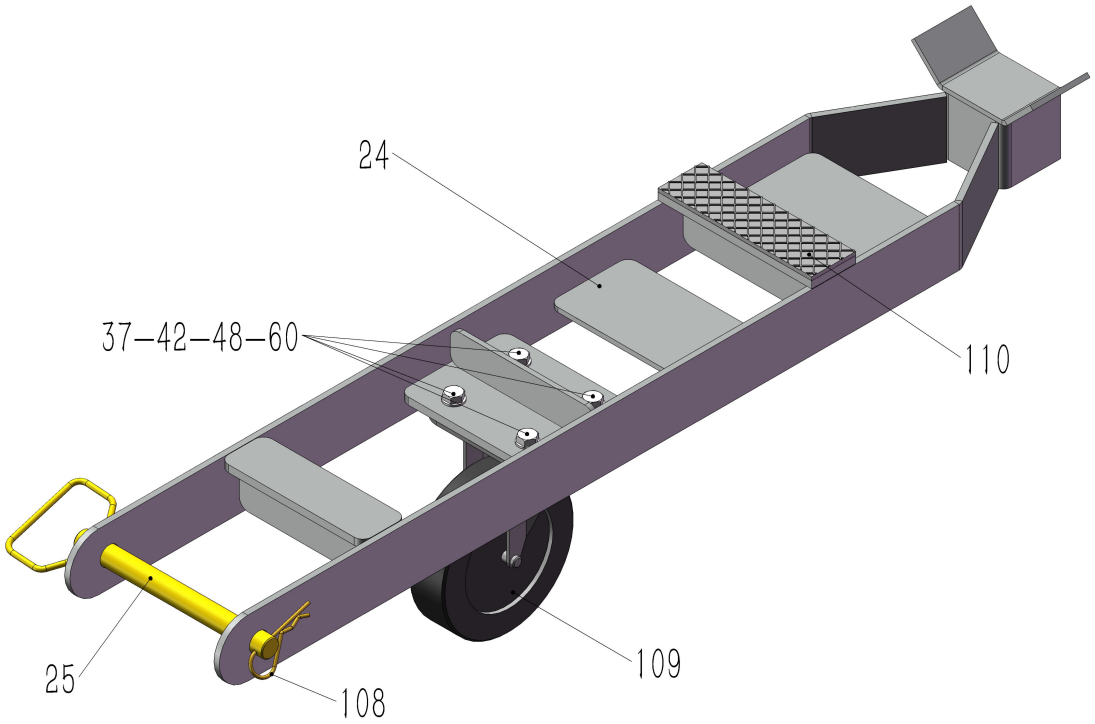

Factory Parts List 1

Lift part list

Main serial number	Serial number	Product name	Quantity/machine
Four-column lift - Manual version			
Welding part			
1		Main columns	1
2		Subsidiary columns	3
3		Left column ’s cup	2
4		Right column ’s cup	2
5		Safety lock	4
6		Main platform	1
7		Subsidiary Platform	3
8		Oil cylinder slider bracket	1
9		Cylinder Growth Wheel Shaft	1
10		Main Platform A Rope Wheel Shaft	2
11		Main Platform B Rope Wheel Shaft	2
12		Linkages	8
13		Crossbeam	2
14		Left manual bumper	2
15		Right manual bumper	2
16		Stop bumper	4
17		Pulley pin roll	4
18		Left hood assembly	2
19		Right guard	2
20		Safety handle	1
21		bumper	1
22		bumper connector	1
23		Approach ramp	4
24		Caster kit	4
25		Hitch pin	4
26		Tool/Jack tray	2
Standard parts			

Factory Parts List 2

27		M5X15 round head bolts	12
28		M6×15 round head bolts	4
29		M6×15 flat head screws	4
30		M8×10 Tightening Bolts	4
31		M8X15 Hexagon Bolt	4+6
32		Hexagon bolts M8X15 round head	1
33		M8×25 hexagon bolts	2
34		M8X30 Hexagon Bolt	4
35		M8X35 Hexagon Bolt	4+32
36		M8×50 hexagon bolts	4
37		M10×30 hexagon bolts	16
38		M12×30 hexagon bolts	16
39		M18×115 hexagon bolts	16
40		Diameter 6 spring washer	4
41		Diameter 8 spring washer	4+2+1+6+4+4+32
42		Diameter 10 spring washer	16
43		Diameter 12 spring washer	16
44		Diameter 18 spring washer	16
45		Diameter 5 flat washer	12
46		Diameter 6 flat washer	4
47		Diameter 8 flat washer	8+2+1+6+4+4+32
48		Diameter 10 flat washer	32
49		Diameter 12 flat washer	32
50		Diameter 14 flat washer	1
51		Diameter 18 flat washer	16+32
52		20 X3 Diameter Flat washer	8+12
53		Flat X3 24 diameter	12
54		M5 nuts	12
55		M8 nuts	4+4+12
56		M8 eye bearing	8
57		M8 ring bolts	4
58		M8 self-locking nuts	4+4+4
59		M10 butter mouth	1+4+4
60		M10 nuts	16
61		M12 nuts	16+2

Factory Parts List 3

62		M18 nuts	16+16
63		M20 nuts	8
Column assembly part			
	1	Main column assembly	1
	2	Auxiliary column assembly	3
64		Power unit	1
65		9/16 Point power unit connector	1
66		¢ 14 Copper gasket	1
	35	M8X35 Hexagon Bolt	4
	47	Diameter 8 flat washer	8
	41	Diameter 8 spring washer	4
	55	M8 nuts	4
	3	Column ‘s cup left	2
	4	Column ‘s cup right	2
	38	M12×30 hexagon bolts	16
	43	Diameter 12 spring washer	16
	49	Diameter 12 flat washer	32
	61	M12 nuts	16
	5	Column Safety Sheet	4
	51	Diameter 18 flat washer	16
	62	M18 nuts	16
Platform assembly part			
	6	Main platform	1
	7	Deputy Platform	3
67		Oil tank	1
68		Cylinder Tailstock SH General purpose	1
69		35 diameter card spring	2
	8	Oil cylinder slider bracket	1
	33	M8×25 hexagon bolts	2
	41	Diameter 8 spring washer	2
	47	Diameter 8 flat washer	2
70		Nylon foot	2
	29	M6×15 flat head screws	4

Factory Parts List 4

71		Growth wheels	4
72		Oil-free bearing-35	4
	9	Cylinder Growth Wheel Shaft	1
	59	M10 butter mouth	1
	32	Hexagon bolts M8X15 round head	1
	41	Diameter 8 spring washer	1
	47	Diameter 8 flat washer	1
73		90 degrees ZG3/8 internal and external joints	1
74		External ZG3/8 Teeth Long Explosion-proof Valve	1
75		9/16 Sharp	1
76		Diameter 16 copper cushion	2
77		Double head 9/16 tip tubing always bent	1
78		Double straight 9/16 tip live tubing	1
79		External joint 9/16 tip - ZG3/8	1
	50	Diameter 14 flat washer	1
80		External joint nut	1
81		1/4 return tubing direct head	1
82		Trachea	1
83		pulley	6
84		Oil-free bearings-25	6
	53	Flat X3 24 diameter	12
85		1 inch galvanized pipe ×18	2
86		1 inch galvanized pipe ×44	2
	10	Main Platform A Rope Wheel Shaft	2
	11	Main Platform B Rope Wheel Shaft	2
	59	M10 butter mouth	4
87		Main platform cables locking plate	1
	31	M8X15 Hexagon Bolt	6
	47	Diameter 8 flat washer	6
	41	Diameter 8 bullet pad	6
88		According to the model corresponding cable steel core 9.53, L1	1
89		According to the model corresponding cable steel core 9.53, L2	1
90		According to the model corresponding cable steel core 9.53, L3	1

Factory Parts List 5

91		According to the model corresponding cable steel core 9.53, L4	1
	63	M20 nuts	8
	52	20 X3 Diameter Flat	8
	12	Linkages	8
	39	M18×115 hexagon bolts	16
	51	Diameter 18 flat washer	32
	44	Diameter 18 spring washer	16
	62	M18 nuts	16
Crossbeam assembly part			
	13	Cross beams	2
	14	Left manual bumper	2
	15	Right-handed bumper	2
	58	M8 self-locking nuts	4
92		Cross Beam safety axle	4
	52	20 X3 Diameter Flat	12
	16	Stop bumper	4
93		Stop Insurance Hook Limit Wheel Pin	4
94		Stop hook limit wheel	4
	47	Diameter 8 flat washer	4
	41	Diameter 8 spring washer	4
	58	M8 self-locking nuts	4
95		torsion spring - left	2
96		torsion spring - right	2
97		6 galvanized pipe ×17	4
98		Pull spring (∅1.6×∅12×72)	8
	17	Cross Beam	4
	31	M8X15 Hexagon Bolt	4
	47	Diameter 8 flat washer	4
	41	Diameter 8 spring washer	4
	53	Flat X3 24 diameter	12
	83	pulley	4
	84	Oil-free bearings-25	4
99		CrossBeam Rope Gear Set	4

Factory Parts List 6

	30	M8×10 Tightening Bolts	4
	59	M10 butter mouth	4
	36	M8×50 hexagon bolts	4
	55	M8 nuts	4
100		Cross Beam Slider	8
	35	M8×35 hexagon bolts	32
	47	Diameter 8 flat washer	32
	41	Diameter 8 spring washer	32
	18	Left hood assembly	2
	19	Right guard assembly	2
	27	M6×15 round head bolts	4
	46	Diameter 6 flat washer	4
	40	Diameter 6 spring washer	4
Assembly part			
	20	Safety handle	1
	21	bumper	1
	22	bumper connector	1
	61	M12 nuts	2
101		bumper spacer	2
102		Cross Beam Unlock Bar A	2
103		Cross Beam Unlock Bar B	2
	56	M8 eye bearing	8
	57	M8 ring bolts	4
	34	M8X30 Hexagon Bolt	4
	55	M8 nuts	12
	58	M8 self-locking nuts	4
	23	Approach ramp	4
104		Nylon slip strip	4
	27	M5X15 round head bolts	12
	45	Diameter 5 flat washer	12
	54	M5 nuts	12
105		Stop end plate	8
106		Rubber brake pads	4
	26	Tool/Jack tray	2

Factory Parts List 7

107		Plastic drip tray	4
	24	Caster kit	4
	25	Hitch pin	4
108		R Hairpin clip	4
109		Universal wheel 150 in diameter	4
	37	M10×30 hexagon bolts	16
	48	Diameter 10 flat washer	32
	42	Diameter 10 spring washer	16
	60	M10 nuts	16
110		Film	4
		Boxes package part	
Serial number		Product name	Quantity
64		Power unit	1
65		9/16 Point power unit connector	1
66		¢ 14 Copper gasket	1
	35	M8X35 Hexagon Bolt	4
	47	Diameter 8 flat washer	8
	41	Diameter 8 spring washer	4
	55	M8 nuts	4
77		Double head 9/16 tip tubing always bent	1
105		Stop end plate	8
106		Rubber brake pads	4
107		Plastic drip tray	4
		M19 expansion bolts	16
		Round notch flat washer	20
		Banding	10
		Consumable pieces	
Serial number		Product name	
70		Nylon foot	2
71		Growth wheels	4

Factory Parts List 8

72		Oil-free bearing-35	4
83		pulley	6
84		Oil-free bearings-25	6
88		According to the model corresponding wire rope steel core 9.53, L1	1
89		According to the model corresponding wire rope steel core 9.53, L2	1
90		According to the model corresponding wire rope steel core 9.53, L3	1
91		According to the model corresponding wire rope steel core 9.53, L4	1
100		Cross Beam Slider	8
104		Nylon slip strip	4
106		Rubber brake pads	4
107		Plastic drip tray	4
109		Caster wheel 150 in diameter	4
110		Film	4

Hydraulic Power-Unit Assembly

Exterior Explosion Chart of 1. Hydraulic Station

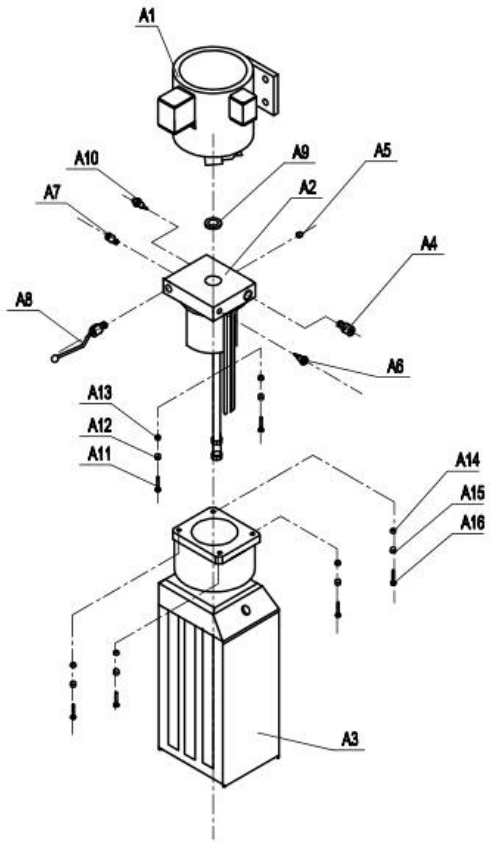

number	Name of name	Quantity	Number	Name of name	Quantity
A1	Motor	1	A9	Sealing gasket	1
A2	Valve core	1	A10	Stuffy	1
A3	Fuel tank	1	A11	M5X40 Hexagon Screw	4
A4	Drop Speed Control Valve	1	A12	Φ5 flat washer	4
A5	Stuffy	1	A13	Φ5 spring washer	4
A6	Oil outlet	1	A14	M6X20 Hexagon Screw	4
A7	Oil outlet	1	A15	Φ6 flat washer	4
A8	Hand wrench valve	1	A16	Φ6 spring washer	4

Hydraulic Circuit

The circuit identifies the reservoir, filter, pump, relief valve, lowering control, check valve, and lifting cylinder. Use these component references during hydraulic service.

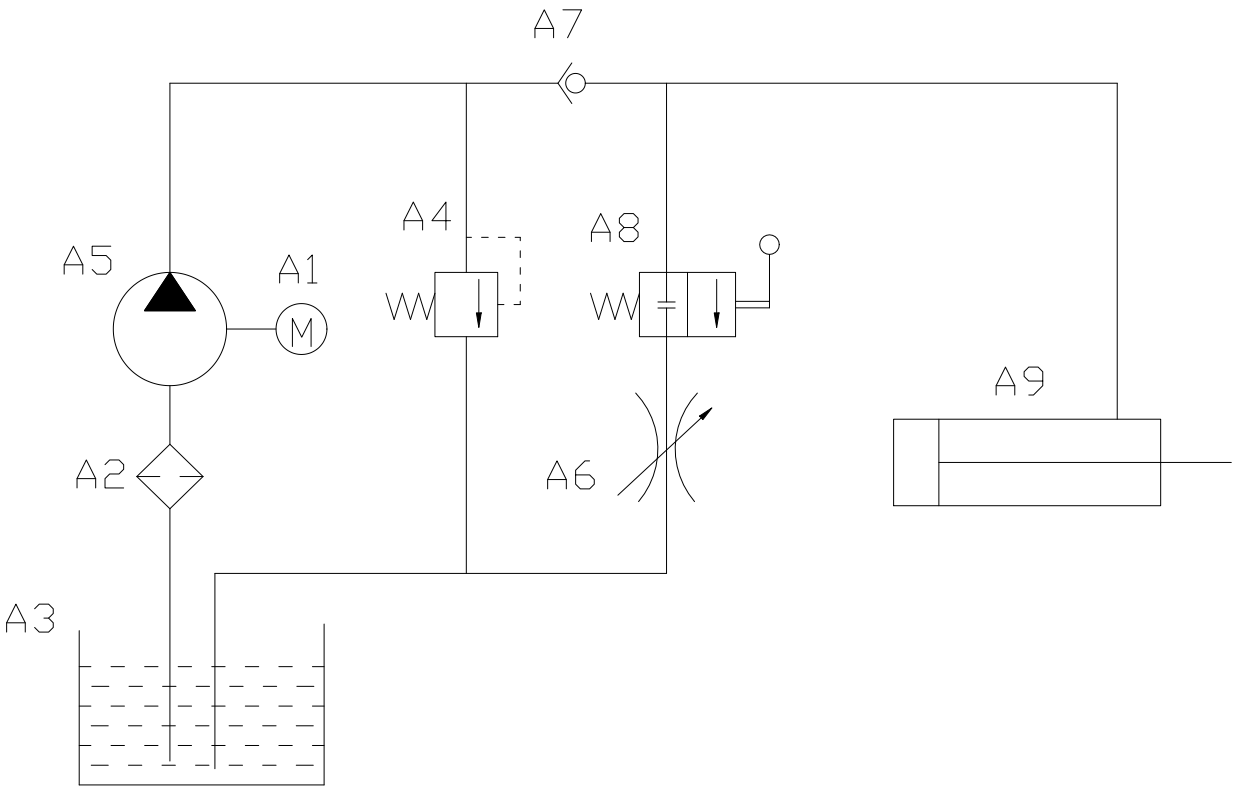

Hydraulic Operation

Pressing the raise control starts the motor and pump. Oil flows from the reservoir through the circuit to the lifting cylinder. Releasing the control stops the pump.

The relief valve limits hydraulic pressure. Its factory setting supports the rated load and must not be increased to lift more than 9,000 lb.

To lower, first raise the platform slightly to unload the mechanical locks, then release the locks and operate the hydraulic lowering control. The control valve returns oil to the reservoir for controlled descent.

Inspect fittings, hoses, valves, and the cylinder for leaks and damage. Qualified personnel must perform hydraulic service.

Packing List

Packing list

Number		Product name	Quantity
64		Power unit	1
65		9/16 Point power unit connector	1
66		∅14 Copper gasket	1
	35	M8X35 Hexagon Bolt	4
	47	Diameter 8 flat washer	8
	41	Diameter 8 spring washer	4
	55	M8 nuts	4
77		Double head 9/16 tip tubing always bent	1
105		Stop end plate	8
106		Rubber brake pads	4
107		Plastic drip tray	4
		M19 expansion bolts	16
		Round notch flat pad	20
		Banding	10

Wear-Parts Reference

List of vulnerable parts

		Vulnerable	
Serial number		Product name	
70		Nylon foot	
71		Growth wheels	
72		Oil-free bearing-35	
83		pulley	
84		Oil-free bearings-25	
88		According to the model corresponding wire rope steel core 9.53, L1	
89		According to the model corresponding wire rope steel core 9.53, L2	
90		According to the model corresponding wire rope steel core 9.53, L3	
91		According to the model corresponding wire rope steel core 9.53, L4	
100		Beam Slider	
104		Nylon slip strip	
106		Rubber brake pads	
107		Plastic drip tray	
109		Cas wheel 150 in diameter	
110		Film	

Disposal and Service Information

When the lift can no longer be used safely, remove it from service and have qualified personnel dismantle it. Dispose of hydraulic oil and other materials according to applicable local requirements.

For replacement parts, service, or warranty assistance, contact Quick Lift USA with the model and serial number.

Quick Lift USA automatically provides a two-year warranty on all non-wearable parts. No registration is required.

3380 S. Power Rd. #105, Gilbert, AZ 85234
602-828-0950
www.quickliftusa.com